/// I-ETMS® On-Board Equipment

Interface Control Document

The I-ETMS® On-Board Equipment Interface Control Document describes the interfaces of the I-ETMS® On-Board System to a locomotive, cab car, or multiple unit.

Document Type: ICD
Document Number: 24-11-16541
Revision: J
Date: 10/8/2021
Control Type: Managed & Controlled
Distribution Type: External

Wabtec Corporation

All Rights Reserved.
© 2010 - 2021 Wabtec Corporation

Document Number: 24-11-16541, Revision J

This document describes the interfaces of the I-ETMS® On-Board System to a locomotive, cab car, or multiple unit and is the official reference source for all revisions/releases of these product until rescinded by an update.

Copyright © 2010 - 2021 by Wabtec Corporation. All rights are reserved. I-ETMS® is a registered trademark of Wabtec Corporation.

All other trademarks and registered trademarks are the property of their respective holders.

Wabtec Corporation

/// Revision History

Rev.	Date	Description	Author
A	01/19/10	Initial Release	Wabtec
B	10/08/10	Updated.	Wabtec
C	07/06/11	Updated.	Wabtec
D	02/04/14	Updates for Passenger Applications, New Models of TMC, TMC Input/Output revisions	Wabtec
E	06/24/14	Updated Requirement for Customer Provided Wheel Tach/Speed Sensor	Wabtec
F	9/7/18	Added 4.3.2.5 (Pneumatic Horn Valve Using Relay Switch), 4.3.2.6 (Pneumatic Horn Valve Not Using Relay Switch), and 4.3.2.7 (Pneumatic Requirements). Updated Appendix B.4 (EBI Connections, 26L with Air Actuated Horn, No Cab Signal, Pneumatic Horn Valve)	Wabtec
G	10/1/18	Replaced figures for parts and wiring diagrams with clearer versions. Made grammar and consistency edits to match Wabtec Publications Group standards.	Wabtec
H	7/29/20	Minor formatting update to tables. Updated Section 3.3, "Train Management Computer" to include information related to the TMC-05 component. Updated Section 3.7, "Navigation Modules" to include information related to the pREF component. Added Section 3.13.3, "Sinclair Quad Antenna."	Wabtec
I	01/13/21	Modified the table 3.5.2 (Electrical Characteristics) in the topic 3.5 (PTC Data Recorder) to update the calculated electrical characteristics of PTC Recorder.	Wabtec
J	10/8/21	DCR164555 – add ILC as a speed source	Wabtec

/// Table of Contents

/// 1 Introduction 10

1.1 Purpose 10

1.2 Scope 10

1.3 References 10

1.4 Definitions 10

1.5 Acronyms 10

1.6 Document Organization 11

/// 2 Overview 13

2.1 Certification 13

2.2 Optional Features 13

2.3 Typical I-ETMS Kits 13

/// 3 Other Equipment Physical Descriptions 17

3.1 Cab Display Unit 17

3.1.1 Second CDU Display 17

3.1.2 CDU Display (Keys above LCD) 18

3.1.3 CDU Mounting Brackets 18

3.1.4 CDU Provisioning 18

3.1.5 Cab Display Unit Technical Specifications 18

3.1.5.1 Physical Characteristics 18

3.1.5.2 Electrical Characteristics 19

3.1.5.3 Operator Interface 19

3.2 Power Supply 19

3.2.1 Physical Characteristics 19

3.2.2 Electrical Characteristics 20

3.3 Train Management Computer (TMC) 20

3.3.1 Physical Characteristics 21

3.3.2 Electrical Characteristics 21

3.3.3 LSI Shelving 23

3.3.4 TMC Connector Mount 23

3.4 TMC System Interface Cables 23

3.4.1 Discrete Input / Output (DIO) Cable 23

3.4.2 Input Output Concentrator (IOC) Cable 24

3.4.3 ETMS Brake Interface (EBI) Cable 24

3.5 PTC Data Recorder 24

3.5.1 Physical Characteristics 25

3.5.2 Electrical Characteristics 25

3.6 PTC Data Radio 26

3.6.1 Physical Characteristics 26

3.6.2 Electrical Characteristics 26

3.7 Navigation Modules (GPS & GNSS) 26

3.7.1 Navigation Sensor Modules (NSM-01 and NSM-04) 27

3.7.2 Physical Characteristics 27

3.7.2.1 Electrical Characteristics (identical for both models) 27
3.7.3 pREF™ 28
3.7.3.1 Physical Characteristics 28
3.7.3.2 Electrical Characteristics 28
3.8 Propulsion Monitoring Hardware 28
3.8.1 Physical Characteristics (identical for all three types of modules) 29
3.9 Pressure Sensor (Transducer) 29
3.9.1 Physical Characteristics 30
3.9.2 Electrical Characteristics 30
3.9.3 Pressure Characteristics 30
3.10 Pressure Switch 31
3.10.1 Physical Characteristics 31
3.10.2 Electrical Characteristics 31
3.10.3 Pressure Characteristics 31
3.11 Cut-Out Switch Assembly 31
3.11.1 Version #1 – Wired to EBI Cable 32
3.11.2 Version #2 - Connectorized Cut-Out Switch Assembly 32
3.12 Magnet Valves 33
3.13 Antennas 33
3.13.1 Tri-Mode Antenna 33
3.13.2 220 MHz Antenna 34
3.13.3 Sinclair Quad Antenna 34
3.14 Cell Modem 35
3.15 Cell Modem Junction Box 35
3.16 Axle Generator-Single Output 35
3.16.1 Mounting Considerations 35
3.17 Axle Generator-Dual Output 35
3.17.1 Mounting Considerations 36
3.18 Isolation Amplifier (Axle Generator Power Supply) 36
3.18.1 Mounting Considerations 36
3.19 Requirements for Customer Provided Wheel Tach/Speed Sensor 36
/// 4 System Interconnect 37
4.1 Connections Between PTC Components 37
4.1.1 Power 37
4.1.2 Ethernet Connections 37
4.1.3 Slot 10 (Application Gateway) 38
4.1.4 GPS Receivers and Antennas 38
4.1.5 Communications Antennas 38
4.2 Connections to Other Systems 39
4.2.1 Speed 39
4.2.2 Brake System Status 40
4.2.3 Distributed Power 42
4.2.4 Propulsion 43
4.2.5 End-Of-Train (EOT) Telemetry 44

4.2.5.1 Tractive Effort 44
4.2.5.2 DC Locomotives 44
4.2.6 Cab Signal Aspects 44
4.3 Brake and Horn Connections 45
4.3.1 Electronic Air Brake System Requirements 45
4.3.2 Air Brake Connection Reference Diagrams 46
4.3.2.1 26L Air Brake Penalty Circuit Configuration 46
4.3.2.2 Electronic Air Brake / No Multiplexed Cab Signal 46
4.3.2.3 Electronic Air Brake with Multiplexed Cab Signal 47
4.3.2.4 Emergency Brake and Horn Control 47
4.3.2.5 Pneumatic Horn Valve Using Relay Switch 48
4.3.2.6 Pneumatic Horn Valve Not Using Relay Switch 49
4.3.2.7 Pneumatic Requirements 50

/// Appendix A Outline Drawings 52

A.1. Cut Out Switch Outline Drawing 52
A.2. EBI Cable Outline Drawing 54
A.3. CDU Outline Drawing 56
A.4. Power Converter Outline Drawing 58
A.5. Alerter Cable Outline Drawing 59
A.6. Current Monitor CM-09 Outline Drawing 60
A.7. VM-03 Voltage Monitor Outline Drawing 61
A.8. Iso Amp (Axle Generator Power Supply) Outline Drawing 62
A.9. Single Axle Generator Outline Drawing 63
A.10. Dual Axle Generator Outline Drawing 64
A.11. Quadrature Wheel Tach (Axle Alternator) Outline Drawing 65
A.12. PTC Recorder Outline Drawing 66
A.13. Cell Modem Outline Drawing 67
A.14. Cell Modem Junction Box Outline Drawing 68
A.15. Pressure Transducer Outline Drawing 68
A.16. Pressure Switch Outline Drawing 69
A.17. NSM-04 Outline Drawing 69
A.18. Train Management Computer Outline Drawing 70
A.19. Tri-Mode Antenna Outline Drawing 72

/// Appendix B Interconnect Drawings 73

B.1. DIO 2400 Connectors 73
B.2. IOC 1206 Connections 74
B.3. EBI Connections, 26L, No Cab Signal 75
B.4. EBI Connections, 26L with Air Actuated Horn, No Cab Signal, Pneumatic Horn Valve 76
B.5. EBI Connections, Wabtec Electronic Air Brake with Cab Signal 77
B.6. EBI Connections, Knorr Electronic Air Brake with Cab Signal 78

/// Table of Figures

Figure 3-1: Cab Display Unit....17
Figure 3-2: Sonalert Assembly....17
Figure 3-3: CDU Display....18
Figure 3-4: CDU Mounting Brackets....18
Figure 3-5: Power Supply....19
Figure 3-6: TMC....20
Figure 3-7: LSI Shelf....23
Figure 3-8: TMC Connector Mount....23
Figure 3-9: DIO Cable....23
Figure 3-10: IOC Cable....24
Figure 3-11: EBI Cable....24
Figure 3-12: PTC Data Recorder....25
Figure 3-13: USB Download Panel....25
Figure 3-14: PTC Data Radio....26
Figure 3-15: NSM-01 Figure 3-16: NSM-04....27
Figure 3-17: pREF™....28
Figure 3-18: Current Module....29
Figure 3-19: Pressure Sensor Transducer....30
Figure 3-20: Pressure Switch....31
Figure 3-21: Version #1 – Cut-Out Switch Wired to EBI Cable....32
Figure 3-22: Version #2 - Cut-Out Switch Assembly....32
Figure 3-23: Cut-Out Switch Assembly Mounting Bracket....33
Figure 3-24: Magnet Valves....33
Figure 3-25: 220 MHz Antenna....34
Figure 3-26: Multi-Band Antenna - 3G....34
Figure 3-27: Multi-Band Antenna - 4G LTE....34
Figure 3-28: Cell Modem Junction Box....35
Figure 3-29: Single Output Axle Generator....35
Figure 3-30: Dual Output Axle Generator....36
Figure 3-31: Axle Generator Power Supply....36
Figure 4-1: 26L Air Brake Penalty Circuit Configuration....46
Figure 4-2: Electronic Air Brake/No Multiplexed Cab Signal....47
Figure 4-3: Electronic Air Brake with Multiplexed Cab Signal....47
Figure 4-4: Emergency Brake and Horn Control....48
Figure 4-5: Lever Controlled Horn Using Relay Switch....49
Figure 4-6: Lever Controlled Horn Not Using Relay Switch....50
Figure 4-7: Pneumatic Horn Check Valve....51
Figure A-1: Cut-Out Switch Front View....52
Figure A-2: Cut-Out Switch Side View....52
Figure A-3: Cut-Out Switch Terminal Block....53
Figure A-4: Cut-Out Switch Pictorial View....53
Figure A-5: EBI Cable....54

Figure A-6: Cut-Out Switch Box Side View 55
Figure A-7: EBI Backshell 55
Figure A-8: Tabulation Chart 55
Figure A-9: CDU Front View 56
Figure A-10: CDU Side View 57
Figure A-11: CDU Bottom View 57
Figure A-12: Power Converter Top View 58
Figure A-13: Power Converter End View 58
Figure A-14: Alerter Cable Outline Drawing 59
Figure A-15: CM-09 Front View 60
Figure A-16: CM-09 Side View 60
Figure A-17: VM-03 Front View 61
Figure A-18: VM-03 Side View 61
Figure A-19: Iso Amp Front View 62
Figure A-20: Iso Amp End View 62
Figure A-21: Single Axle Generator Top View 63
Figure A-22: Single Axle Generator Side View 63
Figure A-23: Dual Axle Generator Top View 64
Figure A-24: Dual Axle Generator Side View 64
Figure A-25: Quadrature Wheel Tach 65
Figure A-26: PTC Recorder Front View 66
Figure A-27: PTC Recorder Side View 67
Figure A-28: Cell Modem Views 67
Figure A-29: Cell Modem Junction Box Top View 68
Figure A-30: Cell Modem Junction Box Side View 68
Figure A-31: Pressure Transducer 68
Figure A-32: Pressure Switch 69
Figure A-33: NSM-04 69
Figure A-34: TMC Front View 70
Figure A-35: TMC Side View 71
Figure A-36: TMC 71
Figure A-37: Tri-Mode Antenna 72
Figure B-1: DIO 2400 Connectors 73
Figure B-2: IOC 1206 Connections 74
Figure B-3: EBI Connections, 26L, No Cab Signal 75
Figure B-4: EBI Connections, 26L with Air Actuated Horn, No Cab Signal, Pneumatic Horn Valve 76
Figure B-5: EBI Connections, Wabtec Electronic Air Brake with Cab Signal 77
Figure B-6: EBI Connections, Knorr Electronic Air Brake with Cab Signal 78

/// Table of Tables

Table 1-1: Definitions 10
Table 1-2: Acronyms 10
Table 2-1: I-ETMS On-Board System Line-Replaceable Units (LRUs) 13
Table 2-2: I-ETMS On-Board System Sensors and Antennas 14
Table 2-3: I-ETMS On-Board System Cables 14
Table 2-4: I-ETMS On-Board System Brackets 15
Table 2-5: I-ETMS On-Board System Ancillary Components 15
Table 2-6: Typical Differences Between Freight and Commuter/Urban Freight Applications 16
Table 3-1: Antenna Cable Standard Lengths 33
Table 4-1: On-Board System Power Distribution 37
Table 4-2: Network Connections 38
Table 4-3: Slot 10 CPU Connections 38
Table 4-4: Antenna Connections 39
Table 4-5: On-Board Data Source Configuration Options 39
Table 4-6: Sensor Management Signal Usage-Speed 40
Table 4-7: Sensor Management Signal Usage-Speed 40
Table 4-8: Sensor Management Signal Usage-Brake System 41
Table 4-9: Sensor Management Signal Usage-Distributed Power 42
Table 4-10: Sensor Management Signal Usage Propulsion 43
Table 4-11: Sensor Management - End-of-Train Telemetry 44
Table 4-12: Current Module Selection 44
Table 4-13: Sensor Management Signal Usage - Cab Signal 45
Table A-1: Tabulation Chart 56

/// 1 Introduction

This section defines the purpose and scope, identifies referenced documents, provides definitions for key elements and acronyms, and provides an organizational overview of the *I-ETMS On-Board Equipment Interface Control Document*.

1.1 Purpose

The purpose of this Interface Control Document (ICD) is to describe the interfaces of the I-ETMS On-Board system to a locomotive, cab car, or Multiple Unit that will be equipped.

1.2 Scope

This document describes the I-ETMS On-Board system hardware. It does not describe system behavior, interfaces to other I-ETMS segments, such as the Office Segment or Wayside Segment, or use and operation of the system.

1.3 References

The following documents are referenced by this document:

- I-ETMS Air Brake Interface Requirements White Paper, WCR-TWP-1008.
- ATCS Specification 110: Environmental Requirements.

1.4 Definitions

Table 1-1: Definitions

Term	Description
I-ETMS	A Positive Train Control on-board system that performs train control functions based on Global Positioning Information (GPS), surveyed track data, and information from the back office and waysides. The I-ETMS On-Board System determines locomotive speed, location, and direction of travel in order to navigate, predict, and enforce all operational rules and regulations
PTC	A technology that prevents train-to-train collisions, derailments caused by excessive speed, unauthorized incursions into established work zones, and train movement through a track switch left in the wrong position.

1.5 Acronyms

Table 1-2: Acronyms

Acronym	Description
AAR	Association of American Railroads
ACP	Asynchronous Communication Protocol
ACP-NRZI	Asynchronous Communication Protocol - Non Return to Zero, Inverted
ATCS	Advanced Train Control Systems
ATM	Atmospheric Pressure
BCP	Brake Cylinder Pressure
BPP	Brake Pipe Pressure
CDU	Cab Display Unit
DIO	Discrete Input Output
EAB	Electronic Air Brake
EBI	Electronic Brake Interface

Acronym	Description
EHR	Engineer Horn Relay
EOT	End of Train
EQ RES	Equalizing Reservoir
FRA	Federal Railroad Association
GPS	Global Positioning System
ICD	Interface Control Document
ILC	Integrated Locomotive Computer
I-ETMS®	Interoperable - Electronic Train Management System
IOC	Input Output Concentrator
ITCM	Interoperable Train Control Messaging
LIG	Locomotive Interface Gateway
LSI	Locomotive Systems Integration (Synchronous)
LRU	Line Replaceable Unit
MCU	Micro-controller Unit
MHz	Megahertz
NSM	Navigational Sensor Module
NYAB	New York Air Brake
OEM	Original Equipment Manufacturer
PCS	Pneumatic Control Switch
PPR	Pulses Per Revolution
PTC	Positive Train Control
PTCH	Positive Train Control Horn
PTCSP	Positive Train Control Safety Plan
QES	Q-Tron Excitation System
RSM	Router-Switch Module
TMC	Train Management Computer
VDC	Volts - Direct Current
VM	Voltage Module
WPN	Wabtec Part Number

1.6 Document Organization

This document is organized into sections:

Section 1 – Introduction, defines the purpose and scope, identifies referenced documents, provides definitions for key elements and acronyms, and provides an organizational overview of the ICD.

Section 2 – Overview, provides an overview of the I-ETMS system.

Section 3 – Equipment Physical Descriptions, describes the physical characteristics of the equipment comprising the I-ETMS On-Board system.

Section 4 – System Interconnect, describes the connections between I-ETMS components, and between I-ETMS components and other systems

Appendix A – Outline Drawings, provides mechanical outline drawings for the I-ETMS components.

Appendix B – Interconnect Drawings, provides schematic drawings for typical applications of the I-ETMS On-Board system.

/// 2 Overview

The Wabtec Railway Electronics I-ETMS® (Interoperable Electronic Train Management System) is a Positive Train Control (PTC) system that provides significant safety and productivity benefits to the railroad. This modular system includes a Train Management Computer (TMC), Cab Display Unit (CDU), Communications System, and other ancillary components. Software running on the train control system is used to perform all train control functions such as determine current position, calculate braking distance, manage restrictions, manage off-board communications, and communicate with the operator display.

Primary Function of I-ETMS System

The primary function of I-ETMS is to enforce a train's authority limits, enforce speed limits, provide protection within work zones, and control train movement through misaligned main track switches. I-ETMS is a locomotive-centric, vital overlay train control system that works in conjunction with existing methods of operation to improve the level of railroad safety and protect against human error.

2.1 Certification

Installation, operation, and maintenance of Positive Train Control (PTC) systems, such as Wabtec's

I-ETMS® system, are regulated by Federal Railroad Administration rules, specifically Part 236 Subpart I (49 CFR 236). Those rules require Certification of PTC systems by the FRA.

It is the responsibility of the railroad to obtain PTC system certification from the FRA, and comply with all FRA regulations governing PTC systems.

The process by which a railroad achieves PTC System Certification requires submission of a PTC Safety Plan (PTCSP) by the railroad.

The PTCSP is required to include "the training, qualification, and designation program for workers regardless of whether those railroad employees will perform inspection, testing, and maintenance tasks involving the PTC system." Further, the PTCSP must also "identify specific procedures and test equipment necessary to ensure the safe operation, installation, repair, modification and testing of the product."

This Interface Control Document does not include worker training and qualification, nor specific installation procedures and test equipment, all of which are required for PTC System Certification.

2.2 Optional Features

I-ETMS systems may optionally be configured to detect "Train Handling Exceptions" and interface to "Energy Management" software applications. Optimal performance of these features requires certain signals be interfaced to the system. There is more detail about these signals described in section 4.2, 'Connections to Other Systems.'

A description of these functions is beyond the scope of this document, and may be found in other Wabtec I-ETMS product descriptions.

2.3 Typical I-ETMS Kits

I-ETMS on-board system equipment kits are provided by Wabtec and are structured by specific locomotive or cab car configuration. Components that may be included in a specific vehicle kit are included in the tables below – broken down as Line Replaceable Units (LRUs), Sensors, Cables, Brackets, and Miscellaneous components.

Table 2-1: I-ETMS On-Board System Line-Replaceable Units (LRUs) identifies the major computing components of the system, including the train control computer, display, event recorder, and the communications elements. In some configurations a second display may be required based upon FRA regulations.

Table 2-1: I-ETMS On-Board System Line-Replaceable Units (LRUs)

Description	Applicability
Train Management Computer (TMC-04, TMC-05)	One required per system – part number determined by TMC configuration
Cab Display Unit (CDU-04)	One required per system – part number determined by CDU configuration (Note: Some configurations may require two displays)

Description	Applicability
PTC Data Recorder	One required per system – part number determined by configuration, Crashworthy
GPS Receiver (NSM-01, NSM-04, pREF)	Two required per system (PTC) – part number determined by type of GPS receiver
System Power Supply (74VDC Input)	One required per system
220MHz ITC Data Radio	One required per system
Cell Modem	Typically, two modems are required
Cell Modem Junction Box	One required per system

Table 2-2: I-ETMS On-Board System Sensors and Antennas, identifies the various sensors and antennas required in the system along with applicability of those sensors based upon locomotive air brake and propulsion configurations.

Table 2-2: I-ETMS On-Board System Sensors and Antennas

Description	Applicability
Tri-Mode Antenna	Two required per system
220MHz Antenna (PTC Data Radio)	Two required per system (Comm)
1/4NPT Pressure Sensor	Five required with 26L, one required with electronic air brake systems, three for LIG
1/4NPT Pressure Switch	One required with 26L air brake systems
Traction Motor Current Sensor	One required on DC locomotives
Generator Voltage Sensor	One required on DC locomotives
Tractive Effort Sensor	Used on AC locomotives only (Requires compatible output from OEM computer)

Table 2-3: I-ETMS On-Board System Cables, identifies the various cables available for connecting system components together and with vehicle sub-systems. The specific set of cables depends upon the vehicle air brake and control system configurations.

Table 2-3: I-ETMS On-Board System Cables

Description	Applicability
CDU1 Sonalert Cable Assembly	One required per system – part number determined by length
CDU1 Power Cable	One required per system – part number determined by length and other variables
CDU2 Sonalert Cable Assembly	Used for a Dual Cab Display configuration – part number determined by length and other variables
CDU2 Power Cable	Used for a Dual Cab Display configuration – part number determined by length and other variables
Ethernet Cables	The total number of Ethernet cables to be determined by system configuration – part number of each cable determined by length
EBI Cable	One required per system – part number determined by air brake type, version of Cut-Out Switch Assembly, required length and other variables
TMC Power Cable	One required per system – part number determined by length and other variables

Description	Applicability
DIO Cable	One required per system – part number determined by air brake type, type of HOTD (26L only), required length, if LIG is present and other variables
IOC Cable	One required per system – part number determined by air brake type, if LIG is present, required length and other variables
PTC Recorder Power Cable	One required per system – part number determined by length
220MHz Power Cable	One required per system – may not be Wabtec supplied
802.11 Antenna Cable	Two required per system
GPS Antenna Cable	Two Required per system – included as part of the tri-mode antenna
220MHz Antenna Cable	Two required per system
Cellular Antenna Cable	Two required per system – included as part of the tri-mode antenna
Cell Modem Junction Box Power Cable	One required per system
Pressure Switch Cable	One required with 26L air brake system

Table 2-4: I-ETMS On-Board System Brackets, identifies a core set of system brackets. Since locomotive and cab car configurations vary to such a great extent, specific brackets per vehicle type are available upon request.

Table 2-4: I-ETMS On-Board System Brackets

Description	Applicability
TMC LSI Shelf/Bracket	One required per system – various options available
PTC Recorder LSI Shelf/Bracket	One required per system – various options available
Data Radio LSI Shelf/Bracket	One required per system – various options available
VM/CM Bracket	Used on DC locomotives only
CDU Mounting Bracket	One required per system – various options available
Cut-Out Switch Cover	One required per system if Cut-Out Switch Assembly wired to EBI cable is used

Table 2-5: I-ETMS On-Board System Ancillary Components, lists the remaining system components that are available for various installation configurations.

Table 2-5: I-ETMS On-Board System Ancillary Components

Description	Applicability
Air Manifold for pressure transducers and pressure switch	Used in 26L and LIG configurations
Circuit Breaker	Used in all configurations
Circuit Breaker Guard	Used in all configurations
Terminal Board	Used in all configurations
Terminal Board Cover	Used in all configurations
Power Diode (Used in Horn Circuit)	Used in all configurations
Penalty Valve (74V, NO) and mounting bracket	One required with 26L Air Brake Systems

Description	Applicability
Emergency Valve (74V, NC) and mounting bracket	One required with 26L Air Brake Systems
Emergency Valve (74V, NO) and mounting bracket	One required with CCB1 or CCB2 Air Brake Systems
Penalty Cut-out Valve	One optional with 26L Air Brake Systems
Power Supply Terminal Cover	Used in all configurations

Table 2-6: Typical Differences Between Freight and Commuter/Urban Freight Applications

Freight	Commuter/Urban Freight
NSM-01	NSM-04
Single Output Wheel Tach / Axle Generator	Dual Output Axle Generator / Wheel Tach
	Cutout Valve with Sensor
	Legacy Link Recorder (for Bach Simpson Recorders)

/// 3 Other Equipment Physical Descriptions

This section describes the physical characteristics of the equipment comprising the I-ETMS On-Board system. This equipment complies with the ATCS Specification 110: Environmental Requirements.

3.1 Cab Display Unit

The Cab Display Unit (CDU) provides a graphical user interface; it displays all of the navigational and operating information to the operating crew.

The CDU provides eight soft keys for operator interaction with the system. The soft keys also allow for navigation through the diagnostic menu to aid in troubleshooting the system by qualified personnel. One brightness control key controls both LCD and LED brightness. All of the data provided to the CDU originates from the Train Management Computer (TMC) via an Ethernet cable.

The Engineer's CDU (CDU1) should be located in an area that is directly accessible to the Engineer, preferable in-line with the Engineer's view out the front window. The display should be located within easy reach of the Engineer, as routine interaction with the system is required by pressing keys on the CDU bezel. In order to alert the Engineer of warnings or enforcements, the I-ETMS system includes an audible alerter that connects to the CDU J2 port. The alerter provides a 90dB tone at 2900Hz at 1m and should be located within 24" of the display.

Figure 3-1: Cab Display Unit

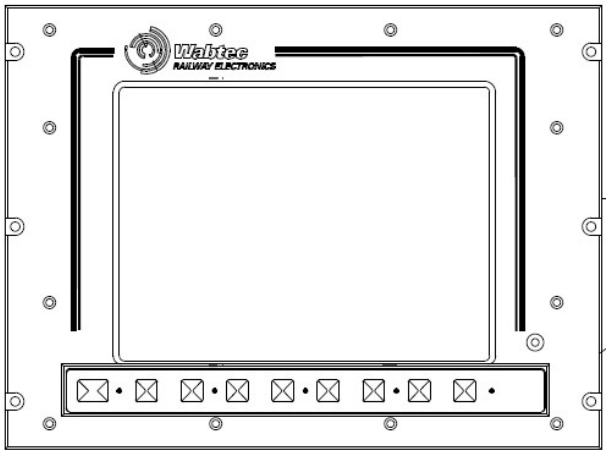

Figure 3-2: Sonalert Assembly

3.1.1 Second CDU Display

For locomotives configured with a second CDU (CDU2), the installation of the unit is similar to the installation of the CDU1 unit. Mount CDU2 within view of the non-engineer position. Note that during operation, the soft key functions of CDU2 are limited. The CDU2 power cable has a jumper between two strapping pins that allows the PTC application to distinguish between CDU1 and CDU2

3.1.2 CDU Display (Keys above LCD)

For installations where the keys of the standard CDU are obstructed by other components (brake handles, etc), Wabtec offers a CDU with keys above the LCD.

Figure 3-3: CDU Display

3.1.3 CDU Mounting Brackets

Various CDU mounting brackets are available to accommodate the different mounting location options on the different locomotive types.

Figure 3-4: CDU Mounting Brackets

3.1.4 CDU Provisioning

Installations with CDU provisioning normally include all required CDU cabling, CDU mounting brackets and a blanking plate to cover the opening in the CDU mounting bracket. This is useful if a locomotive installation is performed but the CDU is not installed.

3.1.5 Cab Display Unit Technical Specifications

The technical specifications are identical for both CDU styles.

3.1.5.1 Physical Characteristics

Size	Depth: 4.5"
	Body: 11.9" Wide, 9.3" High
	Bezel: 13.66" Wide, 10.16" High
Weight	14 lbs
Ventilation Requirements	None
Operating Temperature	-30C to +60C
Clearance Requirements	1" below unit for cable clearance

3.1.5.2 Electrical Characteristics

Supply Voltage	9.0VDC to 15.0VDC
Supply Current	2.5A at 13.6VDC
Power Consumption	20W Typical
	40W Max
Communications	One Ethernet port (100baseT) isolated to 500VRMS

3.1.5.3 Operator Interface

Screen	640 x 480 Color LCD, 10.5” (diagonal) viewing area

3.2 Power Supply

Power for the I-ETMS system is provided by a “PTC” power supply. The PTC Power Supply is a DC-DC converter which operates from the 74VDC locomotive power and generates the nominal 13.6VDC to supply power to the I-ETMS System.

Figure 3-5: Power Supply

3.2.1 Physical Characteristics

Size	7” Wide, 9.4” Deep, 2.9” High
Weight	5 lbs
Mounting	An optional adapter plate may be used for mounting on a standard LSI shelf. The adapter plate complies with industry standards for LSI equipment mounting (3MCU).

Ventilation Requirements	2” clearance above top surface for natural convection
Operating Temperature	-40C to +70C
Clearance Requirements	Access to screw terminals along end of unit required for power connections

3.2.2 Electrical Characteristics

Supply Voltage	50VDC to 90VDC
Output Voltage	13.5VDC ±2%
Output Current	15A Maximum
Isolation	Chassis, Input, and Output isolated to 2500V

3.3 Train Management Computer (TMC)

The Train Management Computer:

- Accepts & Validates Operating Data from Peripheral Devices, Office Segment and Wayside Segment
- Determines Train Location, Speed, and
- Enforces Authorized Train Movement

There are several models of the TMC-04 and TMC-05 components, with different interface and processing capabilities.

The varying capabilities related to:

- Processor card CPU performance
- Inclusion of an additional processor card to host business applications
- Inclusion of an additional processor card to host communications protocol software, such as the ITCM communications software. This card is available with or without an 802.11 data radio.
- Provision to interface to two cellular data modems
- Ability to interface to:
  - 74 volt Locomotive signals,
  - Low voltage (nominal 12 V) cab car signals, or
  - Pulse Width Modulated (PWM, nominal 24V, 1000Hz) Electric Multiple Unit (EMU) signals.

The Train Management Computer complies with industry standards for LSI equipment mounting. The TMC width is 9 MCU.

Figure 3-6: TMC

3.3.1 Physical Characteristics

Size	11.4” Wide, 11.9” Deep, 9.3” High
Weight	19.6 lbs
Mounting	9-MCU per AAR specification M590
Ventilation Requirements	Forced air is not required, but chassis is ventilated.
	2” clearance above, 1” clearance below required for natural convection.
Operating Temperature	-40C to +70C
Clearance Requirements	3” in front for connector clearance

3.3.2 Electrical Characteristics

Supply Voltage	9.0VDC to 15.0VDC
Supply Current	5A at 13.6VDC
Power Consumption	60 W Typical
	107W Max
RSM Card Communications	Five Ethernet ports (100baseT), each isolated to 500 VRMS The TMC is available withsix Ethernet ports.
DIO Cards	There are several models of DIO Card. Input numbers and types vary by model. Please contact your Wabtec Program Manager if you require detailed information by model.
DIO Card 74VDC Discretes	Group 1: 15 inputs, isolated to 1000VRMS
	Group 2: 3 inputs, isolated to 1000 VRMS
	Group 3: 3 inputs, isolated to 1000 VRMS
	Brake Interface Group: 2 inputs, isolated to 2000 VRMS
	Input Current: 500µA @ 74VDC
	Safe operating range: -85VDC to 135VDC
	Guaranteed “On” detection level: 18VDC
	Guaranteed “Off” detection level: 7VDC
DIO Card High Voltage Analog	One input, isolated to 1000VRMS with 74VDC discrete group 1
	Input Current: 1.5mA @ 74VDC
	Safe operating range: -85VDC to 135VDC
	Measurement accuracy: 1%
DIO Card Pressure Sensors	Six 4-20mA current loop inputs
	Measurement accuracy: 1%
DIO Card Voltage and Current Sensors	Designed for operation with Wabtec sensor modules
	Two inputs, each isolated to 1000VRMS
	Safe operating range: -85VDC to 135VDC
	Measurement accuracy: 5%
DIO Card Wheel Tachometer	Passive tachometer input: • Operating Frequency Range 5Hz to 20kHz • Sensitivity: 500mV p-p l Safe operating range: 0-80Vp-p

	• Input impedance: 8k Ohms • Accuracy: 0.1%
	Active tachometer input: • Operating Frequency Range 0Hz to 20kHz • Sensitivity: 7VDC • Safe operating range: 0-15VDC • Input impedance: 860 Ohms • Accuracy: 0.1%
DIO Card Low Voltage Discretes	Guaranteed “On” detection level: 8VDC
	Guaranteed “Off” detection level: 3VDC
DIO Card 74V PWM Inputs	Logic 1: 25V or greater
	Logic 0: 5V or less
DIO Card 24V PWM Inputs	Logic 1: 19V or greater
	Logic 0: 1V or less
IOC Card Cab Signal Discretes	Group 1: 6 inputs, isolated to 1000VRMS
	Group 2: 6 inputs, isolated to 1000VRMS
	Input Current: 2.5mA @ 32VDC
	Safe operating range: -85VDC to 135VDC
	Guaranteed “On” detection level: 18VDC
	Guaranteed “Off” detection level: 7VDC
IOC Card Serial Ports	2 RS232 Asynchronous Serial Ports (COM1, COM2) • Tx Data, Rx Data • Speeds up to 115 Kbps
	2 RS232/422 Asynchronous Ports (COM3, COM4) • COM3, RS-232: TxData, RxData • COM3:RS-422:TxDA,TxDB,RxDA,RxDB • COM4, RS-232: TxData, RxData, CTS, RTS • COM3: RS-422: TxDA, TxDB, RxDA, RxDB • Speeds up to 115 Kbps
	2 RS422 Synchronous/Asynchronous Serial Ports (COM5, COM6) • Asynchronous, NRZI, or HDLC • Speeds up to 115 Kbps
EBI Card Penalty Drive	Isolated to 2000VRMS
	Minimum Output Load @ 32VDC: 22 Ohms
	Maximum Output Load @ 32VDC: 3200 Ohms
	Minimum Output Load @ 74VDC: 50 Ohms
	Maximum Output Load @ 74VDC: 7400 Ohms
EBI Card Emergency Drive	Isolated to 2000VRMS
	Safe operating range: -85VDC to 135VDC
	Minimum Output Load @ 74VDC: 74 Ohms
	Maximum Output Load @ 74VDC: 7400 Ohms

EBI Card Horn Drive	Isolated to 2000VRMS
	Safe operating range: -85VDC to 135VDC
	Minimum Output Load @ 74VDC: 74 Ohms
	Maximum Output Load @ 74VDC: 7400 Ohms

3.3.3 LSI Shelving

LSI shelving for mounting multiple components as well as individual component brackets are available to allow for flexibility in retrofit configurations. Custom mounting is available upon request.

Figure 3-7: LSI Shelf

3.3.4 TMC Connector Mount

Installations with TMC provisioning normally include all required TMC cabling, TMC LSI shelving/brackets and a TMC Connector Mount for securing and protecting the three major cables (DIO, EBI and IOC) in the system. The TMC Connector Mount complies with industry standards for LSI equipment mounting (9MCU) and should be installed in the exact location of the TMC. This is useful if a locomotive installation is performed but the TMC is not installed.

Figure 3-8: TMC Connector Mount

3.4 TMC System Interface Cables

The following sections describe the major interface cables connecting the TMC-04 to other vehicle systems.

3.4.1 Discrete Input / Output (DIO) Cable

The DIO Cable provides the discrete and analog inputs from both high voltage signals and low voltage transducers to the DIO Card.

Figure 3-9: DIO Cable

3.4.2 Input Output Concentrator (IOC) Cable

The IOC Cable provides a combination of six serial and twelve discrete interfaces to allow the I ETMS processors in the IOC Card to connect to other locomotive subsystems.

Figure 3-10: IOC Cable

3.4.3 ETMS Brake Interface (EBI) Cable

The EBI Cable provides a safety critical interface to the locomotive penalty circuit. It connects this circuit to the EBI Card's triple-redundant processor architecture which provides redundancy for safety and fault tolerance for availability.

Figure 3-11: EBI Cable

3.5 PTC Data Recorder

The Wabtec PTC Data Recorder provides a single box, crash hardened, and time synchronized recording solution for the storage of both PTC and Event Recorder data, as well as future locomotive data storage needs.

The Wabtec PTC Data Recorder provides the following salient features:

- Ethernet port for direct connection to Wabtec I-ETMS™ system or on board locomotive network
- Compatible with existing RS-422 locomotive communication channels.
- "Plug" compatible with Wabtec IDR recorder family, and other legacy Wabtec PCM/CHM recorders when using optional interconnecting cable (s)
- Real-time clock for time stamping of all received data. Internal clock can auto-synchronize with external ETMS/GPS
- Digital protection and verification of stored data integrity.
- Synchronization with Wabtec Videotrax™ video recording system.
- PTC Recorder may record data from selected discrete input Wabtec Event Recorders (M-Series, Bach Simpson) via a Legacy Link serial connection.
- Front panel indicators for "Power", "Recording" and "Link"
    - Power: Indicates unit is receiving sufficient power to function properly
    - Recording: Indicates unit passed diagnostics and sees data on the configured input streams

- Link: Indicates status of the Ethernet link.

- Crash hardened memory (DOT certified to - FRA 49 CFR Part 229)

The PTC Data Recorder complies with industry standards for LSI equipment mounting. The PTC Data Recorder width is 5 MCU.

Brackets are available for mounting of each component individually to allow for flexibility in retrofit configurations and custom mounting is available upon request.

Figure 3-12: PTC Data Recorder

Recorded data may be retrieved via Ethernet access or via the optional USB Remote Download Panel.

Figure 3-13: USB Download Panel

3.5.1 Physical Characteristics

Size	6.2” Wide, 11.5” Deep, 9.3” High
	USB Download Panel. 5” Wide, 3” High, 5” Deep
Weight	27 lbs
Mounting	5-MCU per AAR specification M590
	USB Download Panel within15’ of cable from recorder
Ventilation Requirements	None
Operating Temperature	-40C to +70C
Clearance Requirements	6” in front for connector clearance

3.5.2 Electrical Characteristics

Supply Voltage	74VDC nominal
Supply Current	0.25A (Typical) at 74VDC

	2.5A (Surge) at 74VDC
Power Consumption	18.5W Typical
	185W Surge
Communications	One Ethernet port (100baseT) isolated to 500VRMS

3.6 PTC Data Radio

The PTC Data Radio complies with industry standards for LSI equipment mounting. The PTC Data Radio width is 5 MCU.

Brackets are available for mounting of each component individually to allow for flexibility in retrofit configurations and custom mounting is available upon request.

Figure 3-14: PTC Data Radio

3.6.1 Physical Characteristics

Size	6.19” Wide, 11.5” Deep, 9.25” High
Weight	22 lbs
Mounting	5-MCU per AAR Standard S9101
Ventilation Requirements	TBD
Operating Temperature	-40C to +70C
Clearance Requirements	6” in front for connector clearance

3.6.2 Electrical Characteristics

Supply Voltage	45-100VDC
Supply Current	Transmit – 4A (peak) max into 50 ohm load, 1.8A typical @ 74VDC
	Receiver – 0.5A max @ 74VDC while receiving
Communications	Ethernet Data Network Port (LAN)
	Ethernet Maintenance Port (MAINT)

3.7 Navigation Modules (GPS & GNSS)

To support the I-ETMS navigation functions, Wabtec offers the Navigation Sensor Modules (NSM-01 and NSM-04) and the Precision Reference (pREF™) module options.

3.7.1 Navigation Sensor Modules (NSM-01 and NSM-04)

The Navigation Sensor Module (NSM) is used to provide location information to the TMC from sources such as the U.S. GPS System. Wabtec offers the NSM-04 which, in addition to providing GPS location data, also provides inertial data to assist the TMC determine location by referencing the track database in instances where GPS position is unreliable.

The I-ETMS system utilizes two GPS receivers (NSM-01 or NSM-04) for cross-checking and redundancy. Mount each receiver as close to the vehicle roof as possible and, when using the Wabtec tri-mode antenna, must be within three meters of antenna. Minimizing the cable length between the receiver and GPS antenna mounted on the cab roof will provide maximum signal quality and better system performance.

Figure 3-15: NSM-01

Figure 3-16: NSM-04

3.7.2 Physical Characteristics

Size	3.25” Wide, 5.5” Deep, 1.8” High
Weight	Approximate – 1 lb
Mounting	Orient receiver module with label alignment arrow pointing upward and label text facing rear of locomotive. Typical installation utilizes mounting bracket.
Ventilation Requirements	None
Operating Temperature	-40C to +70C
Clearance Requirements	3” for connector clearance on one end.

3.7.2.1 Electrical Characteristics (identical for both models)

The electrical characteristics are identical for both models of the Navigation Sensor Module.

Supply Voltage	Provided by TMC
Communications	One RS232 channel to TMC
Antenna Connection	BNC Receptacle
	3VDC Power for active antenna provided by receiver.

3.7.3 pREF™

The Precision Reference (pREF™) module provides an increased positional accuracy across a broader constellation of available satellites with the capacity to enhanced navigational position and networked communications.

Figure 3-17: pREF™

3.7.3.1 Physical Characteristics

Size	3.95” Wide, 5.49” Deep, 1.79” High
Weight	1.37 lbs.
Mounting	Orient PNM module with electrical connections facing the left or conductor side of the locomotive and text label facing rear of locomotive.
Ventilation Requirements	None
Operating Temperature	-40C to +70C
Clearance Requirements	3” for external connectors.

3.7.3.2 Electrical Characteristics

Supply Voltage	Supply voltage: Provided by TMC and/or PoE.
Communications	1xRS232 2x10/100 Ethernet
Antenna Connection	BNC 5VDC

3.8 Propulsion Monitoring Hardware

Pulling force of the locomotive, represented as either Tractive Effort or through Traction Motor Current and Generator Voltage, aid I-ETMS in predicting locomotive speed. These signals are not absolutely required for I-ETMS, but better system performance is obtained when they are available. For the “LIG” configuration, these signals are provided through the network connection.

On DC locomotives without a “LIG” configuration both a VM 03 generator voltage sensor and a CM XX (determined by shunt type) current module are used to determine pulling force. Each of these modules provides an isolated measurement that is presented to the TMC DIO module as a frequency proportional to the voltage or current being measured.

On AC locomotives, the TM-02 module is used without a “LIG” configuration that have a +/- 10VDC output to indicate tractive effort. The TM-02 converts the low voltage analog signal into an electrically isolated signal that is presented to the TMC DIO module as a frequency proportional to tractive effort.

Figure 3-18: Current Module

Physically, the VM-03, CM-XX and TM-02 are identical. The CM-03 is pictured.

NOTE AC locomotives without a +/- 10VDC tractive effort signal will require a LIG to obtain tractive effort.

3.8.1 Physical Characteristics (identical for all three types of modules)

Size	3.5” Wide, 2.0” Deep, 5.5” High
Weight	<2 lbs
Mounting	Typical installation utilizes mounting bracket.
Ventilation Requirements	None
Operating Temperature	-40C to +80C

3.9 Pressure Sensor (Transducer)

The pressure transducer provides an electrical signal to the TMC for monitoring Brake Pipe Pressure and other parts of the air brake system.

The I-ETMS system utilizes one or more pressure sensors depending on the Loco Control System type.

Figure 3-19: Pressure Sensor Transducer

3.9.1 Physical Characteristics

Size	1.15” Diameter, 2.05” High
Weight	Approximate – 3 oz
Mounting	Typical installation utilizes air manifold. Vertical mounting only - with connecter facing up. ¼-18” NPT thread.
Ventilation Requirements	None
Operating Temperature	-40C to +80C
Clearance Requirements	3” above transducer for connector clearance

3.9.2 Electrical Characteristics

Supply Voltage	Provided by TMC

3.9.3 Pressure Characteristics

Operating Pressure Range	0 to 150 PSIG
Proof Pressure	200 PSIG
Burst Pressure	400 PSIG

3.10 Pressure Switch

Locomotives with a “TMC-DIO” configuration require a pressure switch to indicate cut-in / cut-out status of the airbrake.

Figure 3-20: Pressure Switch

3.10.1 Physical Characteristics

Size	1.25” Diameter, 3.33” High
Weight	Approximate – 6 oz
Mounting	Typical installation utilizes same transducer air manifold. Vertical mounting only - with connecter facing up. ¼-18” NPT thread.
Ventilation Requirements	None
Operating Temperature	-40C to +80C
Clearance Requirements	4” above transducer for connector clearance

3.10.2 Electrical Characteristics

Supply Voltage	Provided by TMC

3.10.3 Pressure Characteristics

Operating Pressure Range	0 to 200 PSIG

3.11 Cut-Out Switch Assembly

The Cut-Out Switch Assembly interfaces to the “EBI-300” Brake Interface module on the TMC to allow bypass of the ETMS system in the event of a system failure. I-ETMS provides outputs to the locomotive brake system through a penalty interface and an emergency interface. I-ETMS also provides an output to the locomotive horn through a connection to the electro-pneumatic horn valve. A fault in either the penalty or emergency circuits of the EBI would cause the train brakes to apply and would require intervention from the crew to release them. The purpose of this module is to provide the capacity for that crew interaction. In the same manner, a fault in the horn circuit could cause the horn to sound continuously and would require crew interaction to remedy the problem.

Since each of these circuits operates independently from one another, and since the I-ETMS system can still function in the presence of a failure of only one of these circuits, the Cut-Out Switch Assembly will provide independent cut-out control of the penalty, emergency, and horn interfaces.

Wabtec offers the following two versions of the Cut-Out Switch Assembly that have identical mounting hole patterns:

3.11.1 Version #1 – Wired to EBI Cable

This version of the Cut-Out Switch Assembly comes as part of the EBI cable. It is wired directly to the EBI cable via ring terminals. An optional pad-lockable cover may be used with this version.

Figure 3-21: Version #1 – Cut-Out Switch Wired to EBI Cable

3.11.2 Version #2 - Connectorized Cut-Out Switch Assembly

This version of the Cut-Out Switch Assembly is a stand-alone unit and is not directly wired to the EBI cable. Instead, this unit has a connector which can be mounted on the right-side, bottom-side, or left-side of the unit. A pad-lockable cover is incorporated in this version.

Figure 3-22: Version #2 - Cut-Out Switch Assembly

Both version of the Cut-Out Switch Assembly utilize a mounting bracket with can be welded or bolted to a locomotive wall.

Figure 3-23: Cut-Out Switch Assembly Mounting Bracket

3.12 Magnet Valves

Depending on air brake type and other variables, magnet valves may be required for initiating emergency and/or penalty brake applications.

Figure 3-24: Magnet Valves

3.13 Antennas

The I-ETMS system includes three antenna options; the Tri-Mode, 220MHz, and Sinclair Quad antennas.

3.13.1 Tri-Mode Antenna

The I-ETMS system can include an antenna that houses RF elements for 802.11, GPS, and Cellular communications frequencies. This “Tri-Mode” antenna provides a convenient packaging solution where space may be limited and also reduces the number of protrusions through the locomotive roof. Each system requires two of these antennas to support GPS redundancy. The minimum spacing between two Tri-Mode Antennas is 7.5inches.

The standard lengths of antenna cables on the Tri-Mode antenna are described in Table 3-1.

Table 3-1: Antenna Cable Standard Lengths

Antenna Cable	Standard Length
Wireless LAN	1 meter
GPS	3 meters
Cellular	3 meters

3.13.2 220 MHz Antenna

The PTC data radio in the I-ETMS system requires two 220 MHz antennas for RF transmission and receive diversity. Installation design of this antenna should consider all other antennas and their susceptibility to 220 MHz transmissions and potential interference at the 220 MHz receiver from adjacent signals such as the locomotive voiceradio.

Figure 3-25: 220 MHz Antenna

3.13.3 Sinclair Quad Antenna

I-ETMS can use the Sinclair Technologies multi-band antenna that houses RF elements required by four communication frequencies:

- Wi-Fi (802.11)
- GPS
- Cellular
- 220 MHz

The Sinclair Technologies multi-band antenna provides a convenient solution since it reduces:

- The amount of space used for these elements
- The number of protrusions required in the locomotive roof

There is a 3G and a 4G LTE version of the Multi-Band antenna. Wabtec recommends using 4G LTE cellular modems with 4G LTE antennas.

Figure 3-26: Multi-Band Antenna - 3G

Figure 3-27: Multi-Band Antenna - 4G LTE

3.14 Cell Modem

The I-ETMS system can include Ethernet-connected cellular modems. Those modems can be programmed to support Verizon, AT&T, or Sprint networks. Communications with the I-ETMS system is via Ethernet.

Power for the modem is provided through that same Ethernet cable per the Power-Over-Ethernet (POE) standard. When using the Wabtec tri-mode antenna, the cell modem must be mounted within three meters of the antenna.

3.15 Cell Modem Junction Box

The Cell Modem Junction Box takes the output from the RSM and power and provides a separate signal/power output for each cell modem.

Figure 3-28: Cell Modem Junction Box

3.16 Axle Generator-Single Output

The Single Output Axle Generator converts the rotation of the locomotive axle into a 60 PPR electrical signal. The circuits inside the axle generator deliver a 0–10V square wave signal with a frequency proportional to the rotational speed of the locomotive axle.

Figure 3-29: Single Output Axle Generator

3.16.1 Mounting Considerations

The axle generator installation procedure applies to all Generator kits. Each kit includes the required mounting hardware and gasket. See the Generator Document for more specific information.

> **NOTE** For applications using an early series, pre-1985, EMD Axle Journal Box Adapter, the axle end adapter must have an oil drain hole. If the axle end adapter does not have an oil drain hole, drill one before installation. Refer to the Installation Notice for instructions and further information.

3.17 Axle Generator-Dual Output

The Dual Output Axle Generator converts the rotation of the locomotive axle into a pair of 240 PPR electrical signals: Signal A and Signal B. The circuits inside the axle generator deliver two 0–10V square wave signals with a frequency proportional to the rotational speed of the locomotive axle. The phase relationship between the two signals is 90 degrees, with Signal A lagging Signal B when the generator is mounted on the left side of the locomotive and traveling in the forward direction.

This axle generator externally appears similar to other axle generators in the rail industry, and it will be mounted in a similar manner. The 60 tooth gear is attached to a drive shaft that will be directly driven by the axle during operation. The

signal this axle generator creates is very specific to the required input of the DIO module within the Train Management Computer.

Figure 3-30: Dual Output Axle Generator

3.17.1 Mounting Considerations

The axle generator installation procedure applies to all Generator kits. Each kit includes the required mounting hardware and gasket. See the Generator Document for more specific information.

> **NOTE** For applications using an early series, pre-1985, EMD Axle Journal Box Adapter, the axle end adapter must have an oil drain hole. If the axle end adapter does not have an oil drain hole, drill one before installation. Refer to the Installation Notice for instructions and further information.

3.18 Isolation Amplifier (Axle Generator Power Supply)

The Axle Generator Power Supply provides up to four isolated speed signal outputs from a single axle generator source. Depending on the axle generator type, the speed input may be either sinusoidal, provided by conventional magnetic style axle generators, or a square wave, provided by an optical axle generator.

Input frequencies may be either 60 or 120 PPR.

Figure 3-31: Axle Generator Power Supply

3.18.1 Mounting Considerations

Mount the Axle Generator Power Supply II under the floor near the main electrical cabinet or other suitable location. Remove the cover to configure and connect cables to the printed circuit board (PCB).

For ease of installation, an optional mounting bracket is also available.

3.19 Requirements for Customer Provided Wheel Tach/Speed Sensor

If a customer supplied speed signal, wheel tachometer or other speed sensor is provided, it shall supply signals compatible with the inputs described in section 3.3.2, Electrical Characteristics. The pulse rate output shall be a minimum of 4 pulses per wheel revolution, a maximum of 20kHz at maximum vehicle speed, and minimum amplitude of 500 mv at 2 miles per hour.

/// 4 System Interconnect

This section describes the connections between I-ETMS components, and between I-ETMS components and other systems.

4.1 Connections Between PTC Components

This section identifies the connection between the PTC components.

4.1.1 Power

I-ETMS On-Board system components are powered either from 13.6VDC or 74VDC according to Table 4-1.

Table 4-1: On-Board System Power Distribution

On-Board System Power Distribution		
Component	**Operating Voltage**	**Source**
TMC J1	13.6VDC	On-Board System Power Supply (PTC Breaker)
Primary CDU (CDU1) J1	13.6VDC	
Secondary CDU (CDU2) J1	13.6VDC	
Cell Modem Junction Box	13.6VDC	
Cell Modems	13.6VDC	On-board System Power (PoE)
GPS1, GPS2	13.6VDC	Power provided by TMC
PTC Data Radio J1	74VDC	Comm Breaker
PTC Data Recorder	74VDC	Local Control Breaker
Traction Motor Current Sensor	74VDC	Local Control Breaker
Generator Voltage Sensor	74VDC	Local Control Breaker

NOTE Determine the power source to use for a hardware component from the recommendations listed below. In this list, the lower the priority number indicates a more desirable power source to use. Priority 1 outputs are the most desirable power sources. Priority 3 outputs are the least desirable power sources but can be acceptable options.

- Priority 1 - an output not shared with other systems.
- Priority 2 - an output shared with non-cab signal systems, such as the event recorder or speedometer.
- Priority 3 - an output shared with cab signal.

4.1.2 Ethernet Connections

An Ethernet switch within the TMC called the Router Switch Module (RSM) provides the networking backbone for all modules within the I-ETMS system via five M12-style connections. The Ethernet switch is capable of operating at either 10Mbps or 100Mbps. The onboard PTC LAN will vary depending on the selection of additional expansion hardware as defined by each railroad. If an external Auxiliary Card Cage or other communications management component (CMU) is selected where the cellular radios will be housed in said component, the TMC shall be equipped with a RSM-0905. If the Wabtec cellular modems are utilized without an Auxiliary Card Cage, the TMC shall be equipped with an RSM-0906 accompanied by a cellular modem junction box. Intra-system connections are made per Table 4-2.

Table 4-2: Network Connections

RSM-0905 On-Board System Ethernet Interconnect			
TMC RSM Port 1	to	Primary CDU J3	
TMC RSM Port 2	to	Secondary CDU J3	
TMC RSM Port 3	to	PTC Data Recorder J2	
TMC RSM Port 4	to	Expansion	**External Ethernet Switch**
			ACC, REX, or other CMU
			LIG
TMC RSM Port 5	to	Diagnostics	
RSM-0906 On-Board System Ethernet Interconnect			
TMC RSM Port 1	to	Primary CDU J3	
TMC RSM Port 2	to	Secondary CDU J3	
TMC RSM Port 3	to	PTC Data Recorder J2	
TMC RSM Port 4	to	Diagnostics or Expansion	**External Ethernet Switch**
			ACC, REX, or other CMU
			LIG
			Diagnostics
TMC RSM Port 5	to	Cellular Modem Junction Box	

4.1.3 Slot 10 (Application Gateway)

The TMC can be equipped with a Central Processing Unit (CPU) in the slot 10 position. This CPU shall be equipped with the ITCM router software or otherwise known as the Application Gateway. There are two types of slot 10 CPU one with WIFI radios and the other without.

Table 4-3: Slot 10 CPU Connections

Slot 10 with WIFI CPU Connections		
Primary WLAN	to	WIFI Antenna #1
Secondary WLAN	to	WIFI Antenna #2
Ethernet	to	220MHz Data Radio LAN Port
Slot 10 CPU Connections		
Ethernet	to	220MHz Data Radio LAN Port

4.1.4 GPS Receivers and Antennas

Two, Wabtec Navigational Sensor Modules (NSM01) shall be utilized to provide redundant GPS data for the I-ETMS system for speed and location inputs. The dual I-ETMS GPS receivers connect directly to the TMC through the Input Output Concentrator (IOC) cable assembly. The connection to the TMC provides power to each receiver and a serial interface for configuring the receivers and receiving data. Each receiver also connects to a GPS antenna through a coaxial cable via a BNC connector.

The NSM04 can be utilized to supplement the NMEA location and speed information with inertial navigation sensor inputs. This component has the same physical attributes regarding dimensions and connections as the NSM01.

4.1.5 Communications Antennas

The industry currently provides a wide variety of antenna solutions for Positive Train Control. The following is a generic view of the various types of antenna to communications component connections.

Table 4-4: Antenna Connections

Antenna Connections		
Cellular Modem #1	to	Cellular Antenna #1
Cellular Modem #2	to	Cellular Antenna #2
220MHz Data Radio TX/RX Port	to	220MHz Antenna #1
220MHz Data Radio RX Port	to	220MHz Antenna #2

4.2 Connections to Other Systems

The I-ETMS On-Board system has been designed to support various vehicle configurations ranging from older locomotives with 26L air brake systems to newer locomotives with networking capabilities. An installer must choose a "Loco Control System" type from the options shown in Table 4-5. This information is entered through the configuration menus on the I-ETMS system cab display. From that selection, the On-Board system dynamically configures I/O ports to match the sources of data available for the selected system.

Throughout this section of the document references will be made to "Control System" so as to clarify the source of specific signals.

I-ETMS systems may optionally be configured to detect "Train Handling Exceptions" and interface to "Energy Management" software applications. Optimal performance of these features requires certain signals be interfaced to the system. There is more detail about these signals described below.

A description of these functions is beyond the scope of this document, and may be found in other Wabtec I- ETMS productdescriptions.

Table 4-5: On-Board Data Source Configuration Options

I-ETMS On-Board Data Source Configuration Choices	
Loco Control System Type	**Attributes**
LSI, ACP, ACP-NRZI, LSI ASYNC	Air Brake Data is obtained through LSI messages sent by the Electronic Air Brake (EAB) Integrated Locomotive Computer (ILC) speed and EOT telemetry is obtained through LSI messages sent byILC. Trainline data is obtained through discrete connections.
LIG	Most data is obtained from the ILC and EAB via a network connection. This includes EMD FIRE with Wabtec electronic air brake systems and the QES control system type.
TMC-DIO	EOT telemetry is obtained through a dedicated serial link to the Front- of-Train device. All data is obtained through discrete connections and pressure sensors.

The I-ETMS Train Management Computer includes modules that connect to other systems; the DIO, IOC, RSM, and EBI. Connections to these modules are discussed below.

4.2.1 Speed

Speed determination for the On-Board system is derived from a combination of GPS,Wheel Tachometer, and ILC Speed.

- GPS speed is obtained directly from the dedicated interface to the system Navigational Sensor Modules.
- Wheel tachometer speed is obtained from an input on the TMC's DIO module that accepts either an active or passive wheel tach signal. The interface requirements for that input are defined in Section 2. During system configuration, the characteristics of the wheel tach input are entered according to pulses-per-revolution (PPR) of thetachometer.
- ILC Speed is obtained from the Integrated Locomotive Computer (ILC) through LSI messages, where equipped.

Table 4-6: Sensor Management Signal Usage-Speed

Signal Usage Key	Signal Availability Key		Control System Key	
Mandatory - Absence of signal results in degraded, but safe operation of PTC or loss of functionality for Train Handling Exceptions or Energy Management	V	Signal within the I-ETMS system	LSI	Locomotive Standards Integration – Standard protocol specification between Locomotive computer and air brake computer
	SER	Data provided through existing locomotive serial interface	ACP	Asynch. Comm. Protocol – Pre-LSI protocol between Locomotive computer and air brake computer
Desired - Signal aids in system performance, but is not required for safe system operation	DSC	Data provided through 74V discrete and analog signals	LIG	Locomotive Interface Gateway – Emerging protocol standard for new EMD and GE locomotives.
	ETH	Data provided from OEM over Ethernet link	TMC- DIO	Train Management Computer Discrete I/O Interface – Direct connection for discrete and analog signals for locomotives without electronic control systems.

Table 4-7: Sensor Management Signal Usage-Speed

	Usage by Function			Availability by Control System Type			
Speed Signal	PTC	Train Handling Exceptions	Energy Mgmt	LSI	ACP	LIG	TMC-DIO
GPS Speed (Provided by two dedicated GPS receivers)	M	M	P	V	V	V	V
Wheel Tach Speed (Provided by discrete wheel tach input)	M	M	P	DSC	DSC	DSC	DSC
ILC Speed	D	—	P	SER		ETH	

4.2.2 Brake System Status

For normal PTC operations, the signals of Brake Pipe Pressure and Air Brake Cut-in/Cut-out status are required, but other signals available directly from an electronic air brake system are also desirable for improved performance.

For the “TMC-DIO” configuration, Brake Pipe Pressure and Brake Cylinder pressure are obtained from a combination of five sensors that connect to the air brake system. These sensors include 2 Brake Pipe Pressure (BPP), 1 Brake Cylinder Pressure (BCP), 1 Atmospheric (ATM) (used as a reference), and 1 Equalizing Reservoir (EQ RES) sensors. These analog pressure sensors are discussed in section 3.9. A pressure switch subject to the 26L, 53 pipe pneumatic circuit is also required to indicated air brake cut-in / cut-out status. All pressure sensor and pressure switch connections are made through dedicated connectors to the TMC DIO module.

For the “LIG” configuration, brake system status is provided through the network connection, but an independent Brake Pipe Pressure sensor – connected through the TMC DIO module – is required for signal redundancy. Redundant BPP and ATM sensor allows for I-ETMS operation even if LIG becomes unavailable.

For all other configurations, brake system status is expected through a serial connection to the Electronic Air Brake computer and an independent BPP sensor is also required. The serial connection is provided through the TMC IOC module via either RS422 synchronous or asynchronous connections. The specific protocol and connector interface is

dictated by the Electronic Air Brake model present and options include NYAB CCB1 and CCB2 and Wabtec EPIC3102, EPIC2, and FastBrake.

Table 4-8: Sensor Management Signal Usage-Brake System

	Usage by Function			Availability by Control System Type			
Brake System Signal	**PTC**	**Train Handling Exceptions**	**Energy Mgmt**	**LSI**	**ACP**	**LIG**	**TMC-DIO**
Front Brake Pipe Pressure	M	M	M	SER/DSC	SER/DSC	ETH/DSC	DSC/DSC
Atmospheric Pressure	M*	M*	**M***				DSC
Brake Pipe Air Flow	—	—	**D**	**SER**	**SER**	ETH	
Locomotive Brake Cylinder Pressure	D	D	**M**	**SER**	**SER**	ETH	DSC
Locomotive Equalizing	—	—	**M**	**SER**	**SER**	ETH	DSC
Reservoir Pressure							
Feed Valve Pressure Setting	—	—	**D**	**SER**	**SER**	ETH	
Air Brake Cut-In Status	M	M	**M**	**SER**	**SER**	ETH	DSC
Air Brake Setup	D	—	**M**	**SER**	**SER**	ETH	DSC
EAB Fault Status	D	D	**D**		**SER**	ETH	
Main Reservoir Pressure	—	—	**D**	**SER**	**SER**	ETH	
Equalizing Reservoir Target Pressure	—	—	**D**	**SER**		ETH	
Brake Cylinder Commanded Pressure	—	—	**D**	**SER**		ETH	
Automatic Brake Handle Position	D	D	**D**		**SER**	ETH	
Independent Brake Handle Position	—	—	**D**		**SER**	ETH	
Emergency Brake Applied	—	D	**D**	**SER**	**SER**	ETH	

	Usage by Function			Availability by Control System Type			
Brake System Signal	**PTC**	**Train Handling Exceptions**	**Energy Mgmt**	**LSI**	**ACP**	**LIG**	**TMC-DIO**
Penalty Brake Applied	—	—	**D**	**SER**	**SER**	ETH	
Bail	—	—	**M**	**SER**	**SER**	ETH	
Distributed Power Enabled Status	D	—	**M**		**SER**	ETH	

4.2.3 Distributed Power

For I-ETMS systems that are applied to Distributed Power (DP) equipped locomotives, the serial connection of Com3/Com4 on the IOC module can be used to received DP status data from the DP system. The serial connection is provided through the TMC IOC module via and RS422 synchronous connections.

Table 4-9: Sensor Management Signal Usage-Distributed Power

	Usage by Function			Availability by Control System Type			
Distribution System Signal	**PTC**	**Train Handling Exceptions**	**Energy Mgmt**	**LSI**	**ACP**	**LIG**	**TMC- DIO**
Distributed Power Status							
DP Enabled Status	D	—	**P**			ETH	
DP Lead Status	D	—	**P**			ETH	
DP Linked Status	D	—	**P**			ETH	
DP Mode	D	—	**P**			ETH	
DP Remote Status							
Remote Unit ID	D	—	**P**			ETH	
Remote Group	D	—	**P**			ETH	
Remote Mode	D	—	**P**			ETH	
Remote Commanded State	D	—	**P**			ETH	
Remote Engine Status	D	—	**P**			ETH	
Remote Traction Motor Current	D	—	**P**			ETH	
Remote Tractive Effort	D	—	**P**			ETH	
Remote Loco BPP	D	—	**P**			ETH	
Remote Eq Res Pressure	D	—	**P**			ETH	
Remote Loco BCP	D	—	**P**			ETH	
Remote Main Res Pressure	D	—	**P**			ETH	
Remote Air Flow	D	—	**P**			ETH	

	Usage by Function			Availability by Control System Type			
Distribution System Signal	**PTC**	**Train Handling Exceptions**	**Energy Mgmt**	**LSI**	**ACP**	**LIG**	**TMC- DIO**
Remote Fault Status (11 data elements per unit)	D	—	**P**			ETH	

4.2.4 Propulsion

Control system signals such as reverser, throttle notch, and dynamic brake are required for normal operation of I-ETMS to predict speed of the train and provide adequate warning to the Engineer for upcoming restrictions. For the "LIG" configuration, all signals in Table 4-10.

Table 4-10: Sensor Management Signal Usage Propulsion

	Usage by Function			Availability by Control System Type			
Propulsion Signal	**PTC**	**Train Handling Excptions**	**Energy Mgmt**	**LSI**	**ACP**	**LIG**	**TMC-DIO**
Reverser	M	M	P	DSC		ETH/DSC	DSC
Throttle Notch	D	D	P	DSC		ETH	DSC
Engine Run	D	—	P	DSC		ETH	DSC
Generator Field On/Off	D	—	P	DSC		ETH	DSC
Traction Motor Current	D**	—	P	DSC (DC)	DSC (DC)	ETH	DSC (DC)
Generator Voltage	**			DSC (DC)	DSC (DC)	ETH	DSC (DC)
Tractive Effort	D	—	P			ETH	
Dynamic Brake Setup	D	—	P	DSC	DSC	ETH	DSC
Dynamic Brake Start / Dynamic Brake On	D	D	P	DSC	DSC	ETH	DSC
Dynamic Brake Excitation	—	—	P	DSC	DSC	ETH	DSC
Power Cut-Off Solenoid Open	M	M	P	DSC	DSC	DSC	DSC
Isolate Switch State	D	—	P	DSC	DSC	ETH	DSC
Sand	—	—	P	DSC	DSC	ETH	DSC
Emergency Sand	—	—	P			ETH	
Wheel Slip Indication	D	—	P	DSC	DSC	ETH	DSC
Battery Knife Switch	D	—	—	DSC	DSC	DSC	DSC

4.2.5 End-Of-Train (EOT) Telemetry

EOT status is required for normal PTC operations with EOT pressure and data validity. For the "TMC-DIO" configuration, EOT status comes from a direct serial link between the TMC DIO module and the Front-of- Train device. For the "LIG" configuration, EOT status is expected through the network connection, and for all other configurations it is expected through a serial connection to the OEM locomotive computer.

Table 4-11: Sensor Management - End-of-Train Telemetry

	Usage by Function			Availability by Control System Type			
End-Of-Train Telemetry Signal	**PTC**	**Train Handling Excptions**	**Energy Mgmt**	**LSI**	**ACP**	**LIG**	**TMC-DIO**
EOT Brake Pipe Pressure	D	D	P	SER	SER	ETH	SER
EOT Moving	—	—	P	SER		ETH	SER
EOT Marker Status	—	—	P	SER		ETH	SER
EOT Front-Rear NoComm	D	D	—	SER		ETH	SER

4.2.5.1 Tractive Effort

Pulling force of the locomotive, represented as either Tractive Effort or through Traction Motor Current and Generator Voltage, aid I-ETMS in predicting locomotive speed. These signals are not absolutely required for I-ETMS, but better system performance is obtained when they are available. For the "LIG" configuration, these signals are provided through the network connection.

4.2.5.2 DC Locomotives

On DC locomotives without a "LIG" configuration both a VM 03 generator voltage sensor and a CM XX traction motor current sensor are used to determine pulling force. Each of these modules provides an isolated measurement that is presented to the TMC DIO module as a frequency proportional to the voltage or current being measured. Locomotive model build shall dictate which Wabtec current module shall be applied for accurate conversion of traction motor current measurement.

Table 4-12: Current Module Selection

MODEL	WPN	TERMINAL A&B	TERMINAL B&C	TERMINAL B&D
CM-03	18305P	50mV/1000A	100mV/1000A	150A/Volt
CM-05	18311P	50mV/1500A	100mV/1500A	330A/Volt
CM-08	18313P	50mV/300A	100mV/250A	100A/Volt
CM-09	18314P	50mV/1500A	100mV/1500A	183.3A/Volt
CM-10	29317P	50mV/1000A	100mV/1000A	200A/Volt

4.2.6 Cab Signal Aspects

I-ETMS enforces cab signal aspects on locomotives that are equipped with cab signal systems. Aspect information for 4-aspect cab signal systems is provided through discrete connections.

ACS Clear, Advance Approach, Approach, Restricting, Cutout, and Partial Cutout status is conveyed through discrete signals received by the TMC IOC module. All discrete inputs are optically isolated to 2000V. The aspect inputs are designed to connect to the 32VDC signals on the cab signal aspect display unit and the cutout inputs are designed to connect to either 32VDC or 74VDC signals at the cab signal system cutout switches. Table 4-13 identifies the discrete cab signal connections.

Table 4-13: Sensor Management Signal Usage - Cab Signal

	Usage by Function			Availability by Control System Type			
Cab Signal Signal	**PTC**	**Train Handling Excptions**	**Energy Mgmt**	**LSI**	**ACP**	**LIG**	**TMC- DIO**
Cab Signal Clear	M	D	—	DSC	DSC	DSC	DSC
Cab Signal Advance Approach / Approach Medium	M	D	—	DSC	DSC	DSC	DSC
Cab Signal Approach	M	D	—	DSC	DSC	DSC	DSC
Cab Signal Restricting	D	D	—	DSC	DSC	DSC	DSC
Cab Signal Cut-Out	M	D	—	DSC	DSC	DSC	DSC
Cab Signal Partial Cut-Out	M	D	—	DSC	DSC	DSC	DSC

4.3 Brake and Horn Connections

The I-ETMS system provides a safety critical interface to the locomotive penalty and emergency brake system as well as the horn through the TMC EBI module. Isolation of 2000 volts separates the penalty, emergency, horn and cab signal functions. The module provides an isolated 32VDC output at a maximum current level of 500 mA for operation of locomotive electronic braking circuitry. It will also operate from locomotive supplied 74VDC if electronic braking is not used.

The penalty drive circuitry consists of a pair of isolated solid state switches which are used to drive both the source and return sides of the penalty circuit. In the event of power loss, circuit failure, or module fault these switches go to an open circuit state generating a penalty. The switches have the capability of driving up to 1.5A continuous current.

I-ETMS includes the capability to multiplex an external cab signal 32VDC penalty signal with the I-ETMS penalty signal for situations where air brake penalty inputs are limited. In that configuration, either I-ETMS or Cab Signal can drive the penalty output of I-ETMS and each of I-ETMS and Cab Signal have independent cutout inputs to suppress a penalty from the corresponding device.

The emergency drive circuit has a normally open solid state switch operating over the range of 24VDC to a maximum of 135VDC and is capable of controlling up to 1A of continuous current. This voltage is obtained from the locomotive supplied 74VDC.

The horn drive circuit also uses a normally open solid state switch operating over the range of 24VDC to a maximum of 135VDC. This circuit is capable of controlling up to 1A continuous current. This voltage is obtained from the locomotive supplied 74VDC.

Two discrete input pairs are used to detect the presence of input voltages equal to or greater than 24VDC. The absence is indicated by a voltage equal to or less than 7VDC. These discretes are to indicate horn actuation or cab signal system cut out.

Specific brake interface connections are shown in Appendix B.

4.3.1 Electronic Air Brake System Requirements

In order to support the I-ETMS On-Board system, the Air Brake system must support the penalty and emergency outputs from I-ETMS according to these general requirements:

I-ETMS requires a safety critical penalty input on the EAB system to command a full-service penalty with the following characteristics:

- Electrically isolated, differential input
- 32VDC nominal drive to hold-off penalty
- 250Ω nominal impedance
- EAB penalty input is active when the EAB is in “Lead” state.

- Loss of voltage on the penalty input causes a non-suppressible full-service 26lb penalty reduction.

The I-ETMS penalty input on the EAB will have a corresponding Cutout Input.

- 74VDC nominal signal to indicate “Cut-Out.”
- Transition event from Cut-In to Cut-Out causes a penalty to occur.

I-ETMS also requires an emergency input on the EAB system.

- 74VDC applied to input causes an Emergency Brake application

> **NOTE** For additional information concerning the electronic air brake system requirements, see the “I-ETMS Air Brake Interface Requirements White Paper."

4.3.2 Air Brake Connection Reference Diagrams

The reference diagrams in this section are provided to aid in the design of connecting I-ETMS to an existing air brake system.

4.3.2.1 26L Air Brake Penalty Circuit Configuration

This configuration has the following characteristics:

- A dedicated magnet valve in the P2A circuit for penalty braking.
- 74VDC locomotive power provides operating voltage for the valve.
- 74VDC locomotive power is also used to disable the cab signal input since it is not used.

Figure 4-1: 26L Air Brake Penalty Circuit Configuration

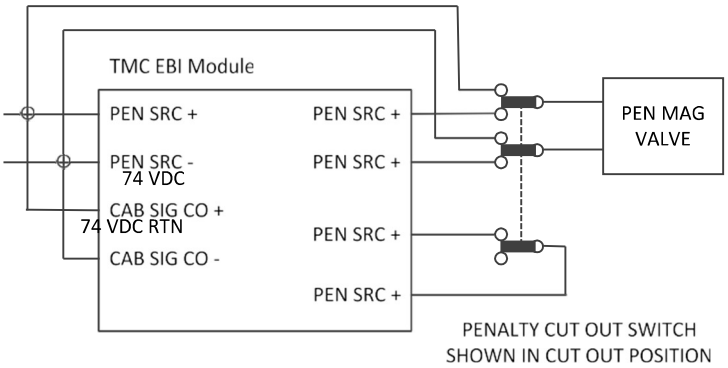

- A penalty cut out switch is provided to disable the system output in the event of a system failure.

4.3.2.2 Electronic Air Brake / No Multiplexed Cab Signal

This configuration has the following characteristics:

- Internally generated 32VDC is supplied to provide the control voltage to the electronic air brake system.
- The penalty cutout switch is fed directly to the air brake to prevent actuation in the event of failure of the system.

Figure 4-2: Electronic Air Brake/No Multiplexed Cab Signal

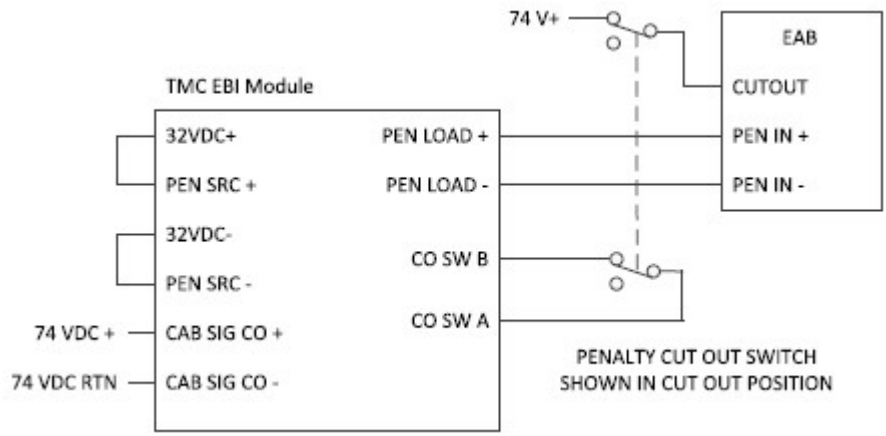

4.3.2.3 Electronic Air Brake with Multiplexed Cab Signal

This configuration has the following characteristics:

- Incorporates the cab signal brake control with the ETMS control.
- Internally generated 32VDC is supplied to provide the operating voltage to the electronic air brake.
- Separate cut out switches are included to disable either ETMS or cab signal control in case of failure.

Figure 4-3: Electronic Air Brake with Multiplexed Cab Signal

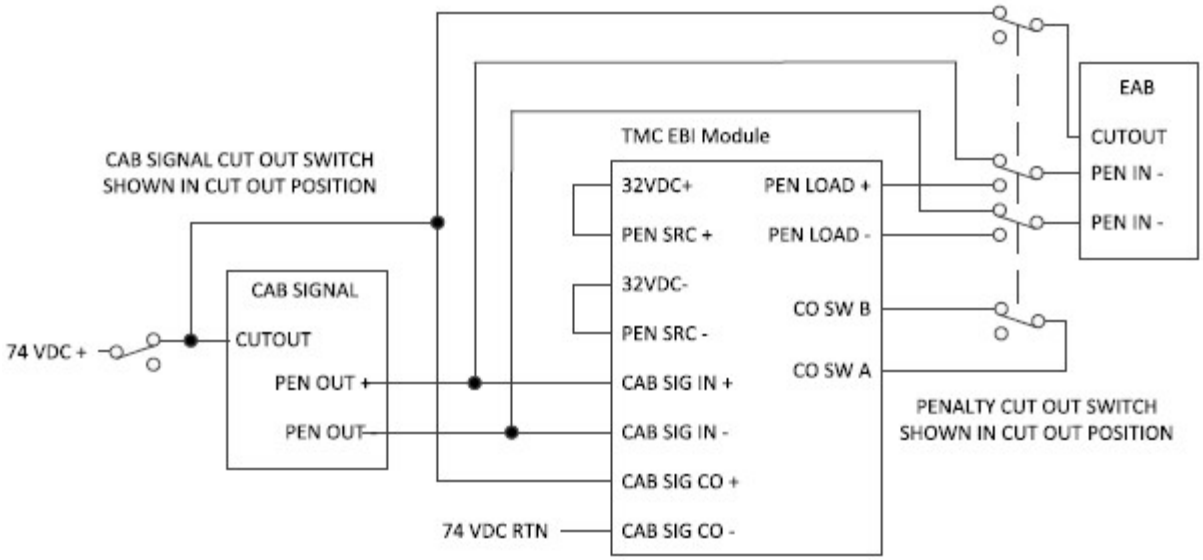

4.3.2.4 Emergency Brake and Horn Control

This configuration has the following characteristics:

- Emergency is controlled via a solid state switch which drives voltage to a normally closed magnet valve.
- A cut out switch is included to disable the Emergency drive in case of a failure.
- Horn is controlled via a solid state switch which drives voltage to a normally closed magnet valve.
- The Horn Sense input is used to identify that the horn has been actuated by the operator.
- This signal is isolated by the diode to prevent the sense circuitry from misidentifying the source of the signal.
- A cut out switch is provided to disable the horn drive in case of failure.

Figure 4-4: Emergency Brake and Horn Control

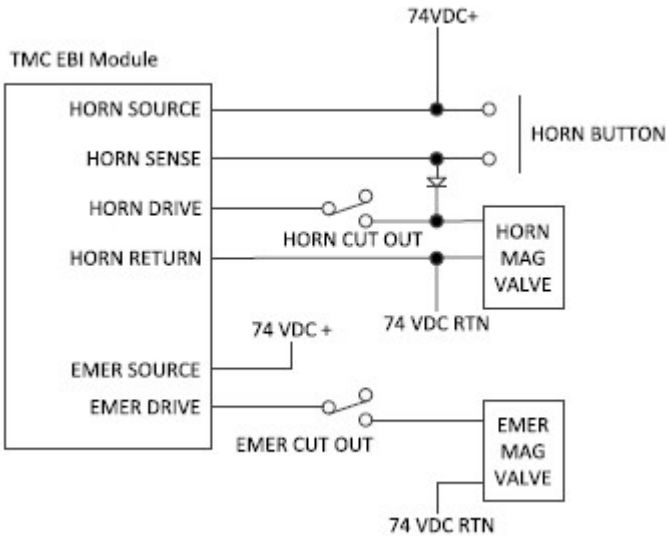

4.3.2.5 Pneumatic Horn Valve Using Relay Switch

This configuration has the following characteristics:

- Allows blowing the horn softer than full blast.
- The Horn Magnet valve does not fully activate horn after a locomotive operator pulls the horn lever.
- Has a normally open PTC Horn (PTCH) switch.
- Has a normally closed Engineer Horn Relay (EHR) switch.
- Requires a check valve as part of the connection between I-ETMS and the air brake system (see section 4.3.2.7).

Figure 4-5: Lever Controlled Horn Using Relay Switch

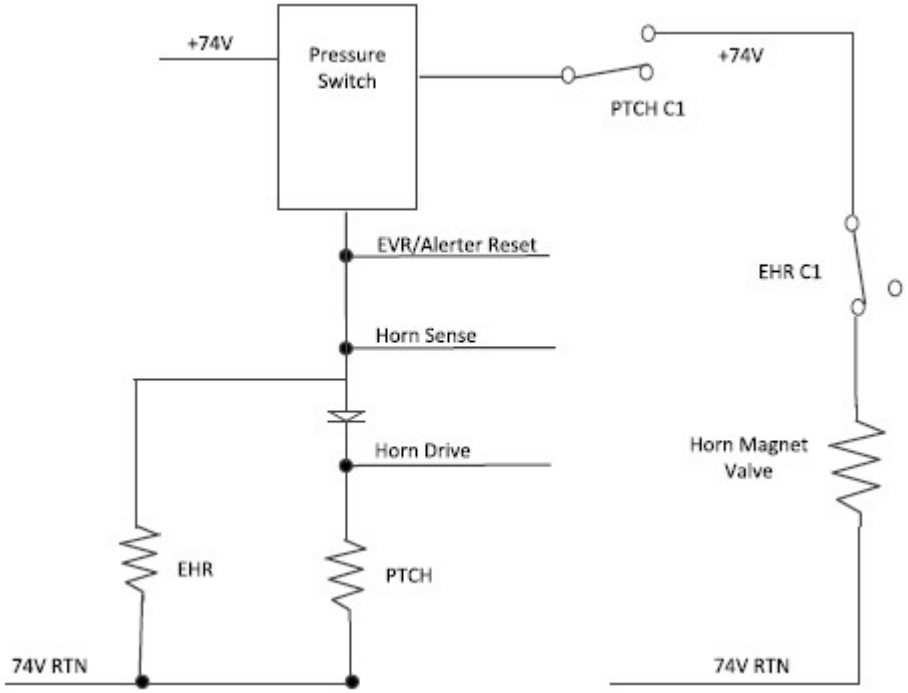

4.3.2.6 Pneumatic Horn Valve Not Using Relay Switch

This configuration has the following characteristics:

- Does not allow blowing the horn softer than full blast.
- The Horn Magnet valve fully activates horn after a locomotive operator pulls the horn lever.
- Requires a check valve as part of the connection between I-ETMS and the air brake system (see section 4.3.2.7).

Figure 4-6: Lever Controlled Horn Not Using Relay Switch

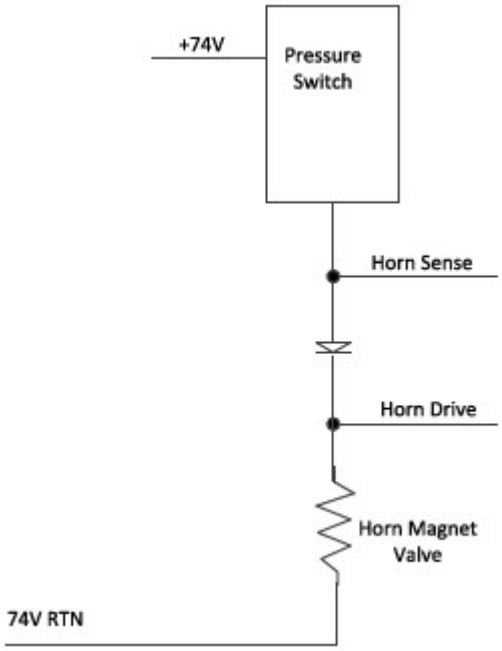

4.3.2.7 Pneumatic Requirements

A Pneumatic Horn Valve (PHV) has the following requirements:

- The horn activates due to an operator action (pulling the horn lever or pressing the horn button), or if signaled from the On-Board System.
- The Pneumatic Pressure Switch closes to deactivate the horn, this switch requires a check valve to prevent unintended horn deactivation caused from PTC activating the magnetic valve to allow air to pass to the horn (see Figure 4-7).
- When an operator presses the horn button or pulls the horn lever, the PHV activates the horn by sending air from the pneumatic main air reservoir (MR) to allow air to pass through to the horn.
- When signaled by the On-Board System, the magnetic valve (or solenoid) activates to allow air to pass through the magnetic valve to the horn. A check valve blocks this air to prevent the pressure switch from closing due to On-Board System horn activation.
- A locomotive requires the check valve shown in Figure 4-7 if it has a PHV (see sections 4.3.2.5 and 4.3.2.6).

NOTE Any locomotive upgraded to use push button horn activation may require a check valve.

Figure 4-7: Pneumatic Horn Check Valve

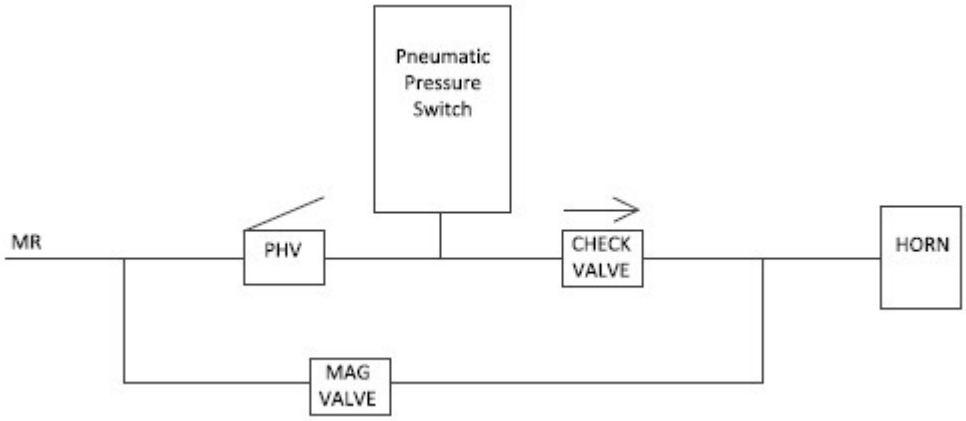

/// Appendix A Outline Drawings

This appendix section provides mechanical outline drawings for the I-ETMS components.

A.1. Cut Out Switch Outline Drawing

Figure A-1: Cut-Out Switch Front View

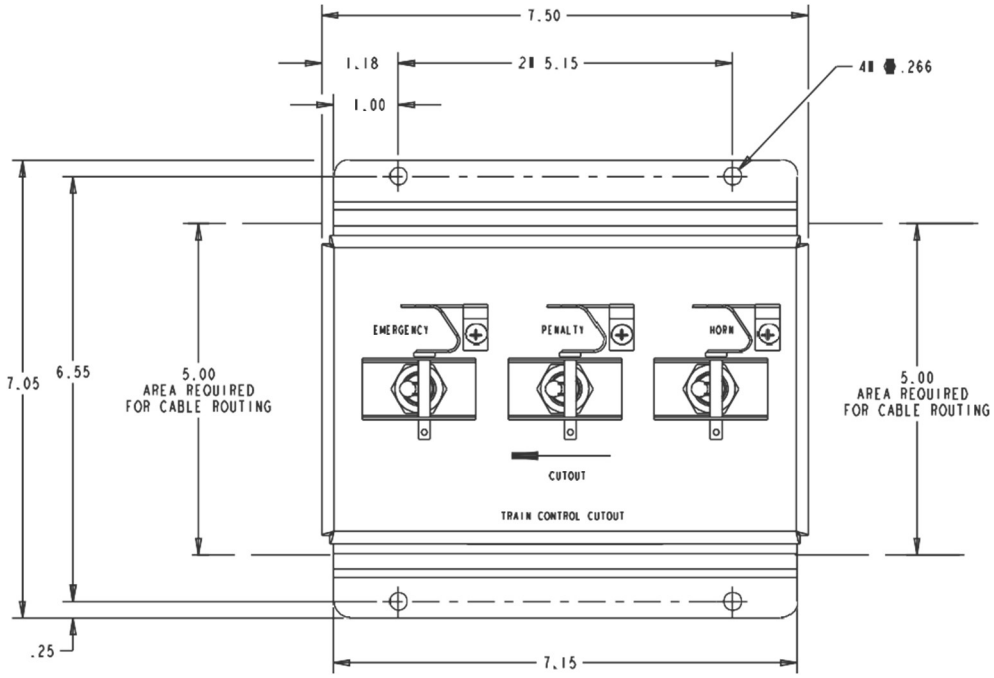

Figure A-2: Cut-Out Switch Side View

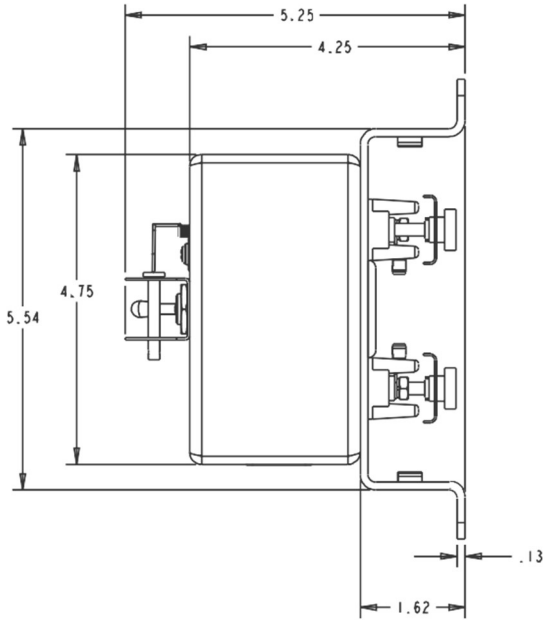

Figure A-3: Cut-Out Switch Terminal Block

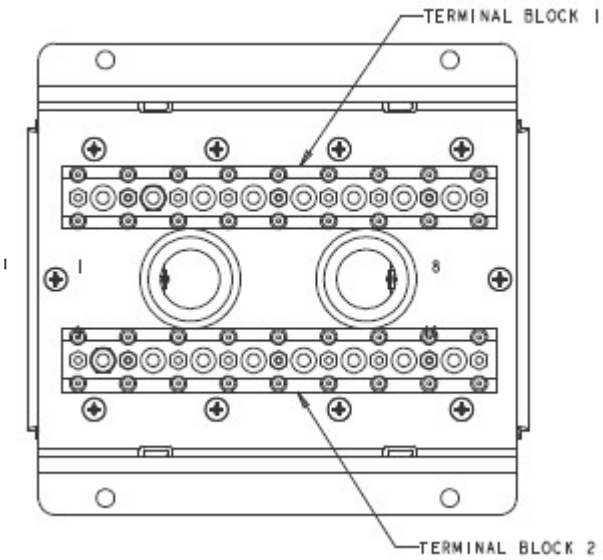

Figure A-4: Cut-Out Switch Pictorial View

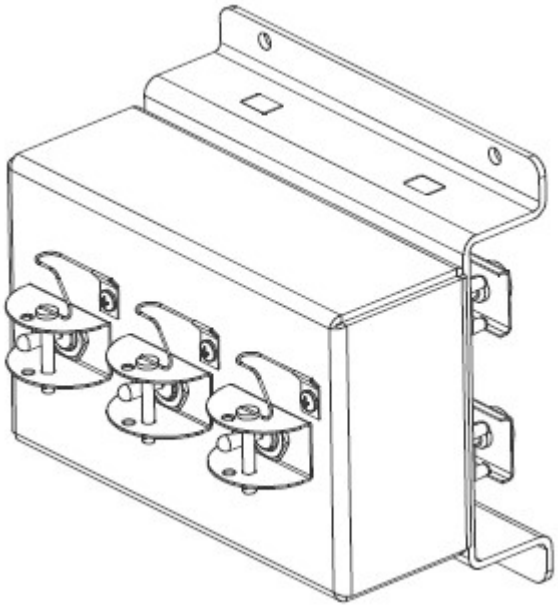

A.2. EBI Cable Outline Drawing

Figure A-5: EBI Cable

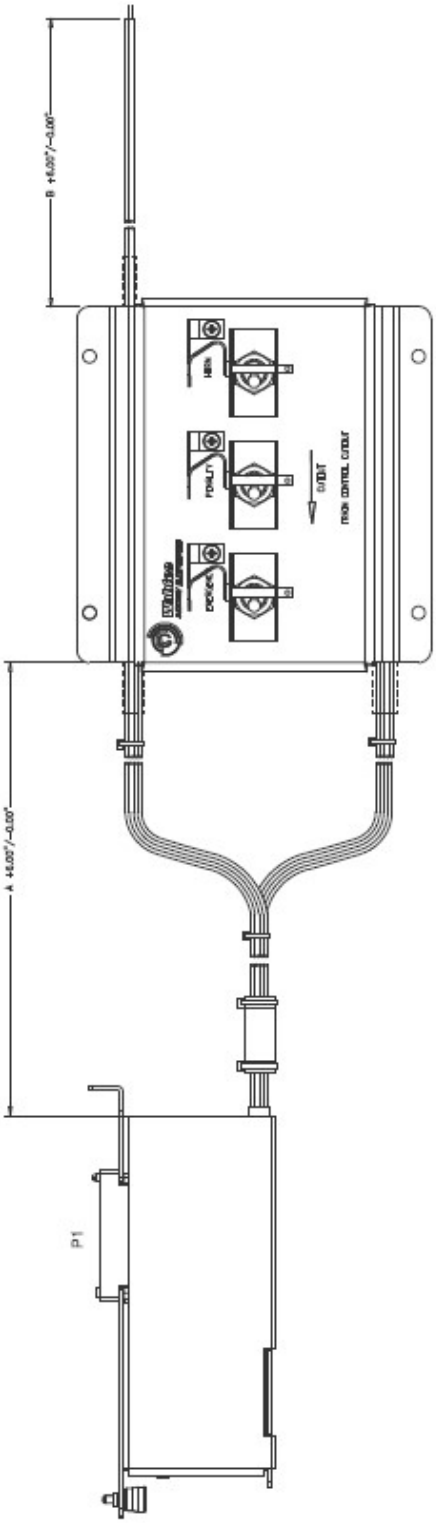

Figure A-6: Cut-Out Switch Box Side View

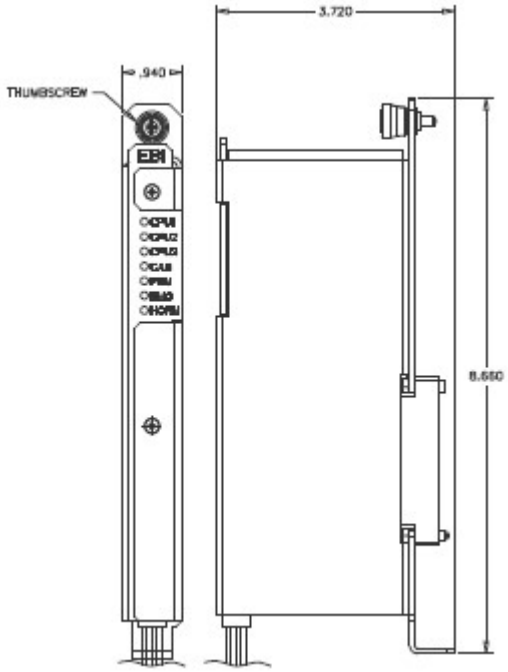

Figure A-7: EBI Backshell

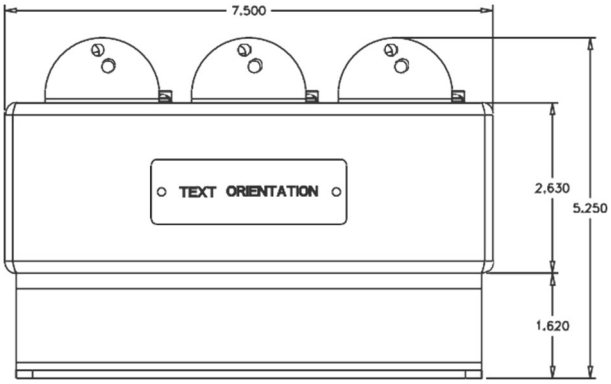

Figure A-8: Tabulation Chart

TABULATION CHART		
WABTEC P/N	DIM A (FT)	DIM B (FT)
26828P	6	25
26828–2	25	25
26828–3	10	25
26828–4	12	25
26828–5	35	25
26828–6	6	35
26828–7	10	35
26828–8	25	35
26828–9	6	60

Table A-1: Tabulation Chart

Tabulation Chart		
Wabtec P/N	**Dim A (ft)**	**Dim B (ft)**
26828P	6	25
26828-2	25	25
26828-3	10	25
26828-4	12	25
26828-5	35	25
26828-6	6	35
26828-7	10	35
26828-8	25	35
26828-9	6	60

A.3. CDU Outline Drawing

Figure A-9: CDU Front View

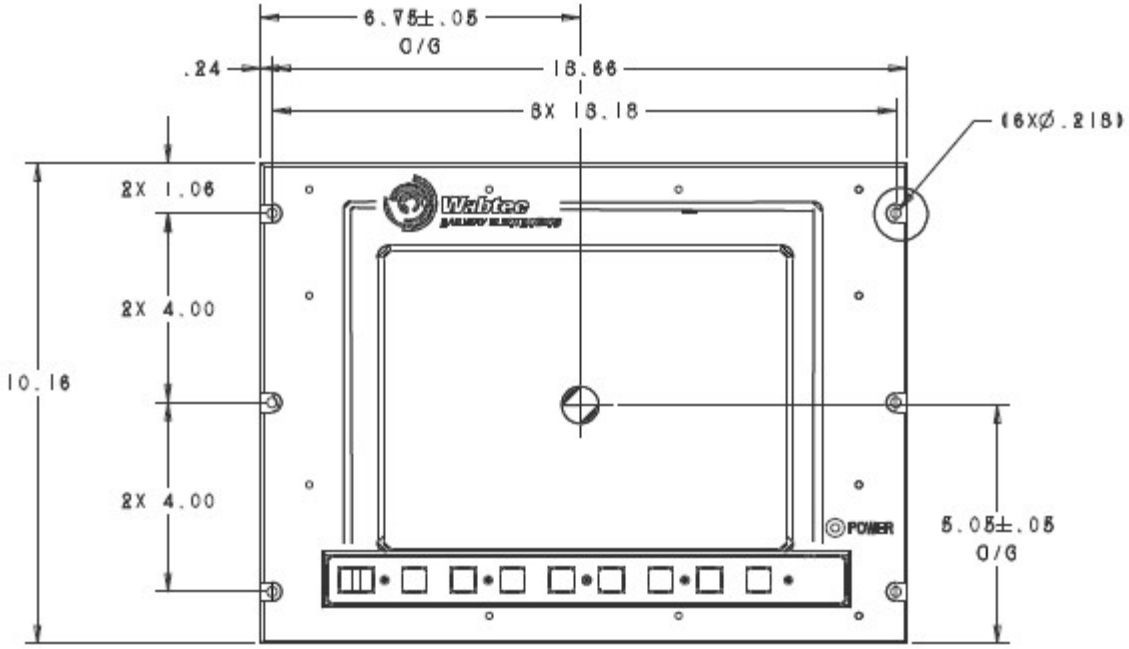

Figure A-10: CDU Side View

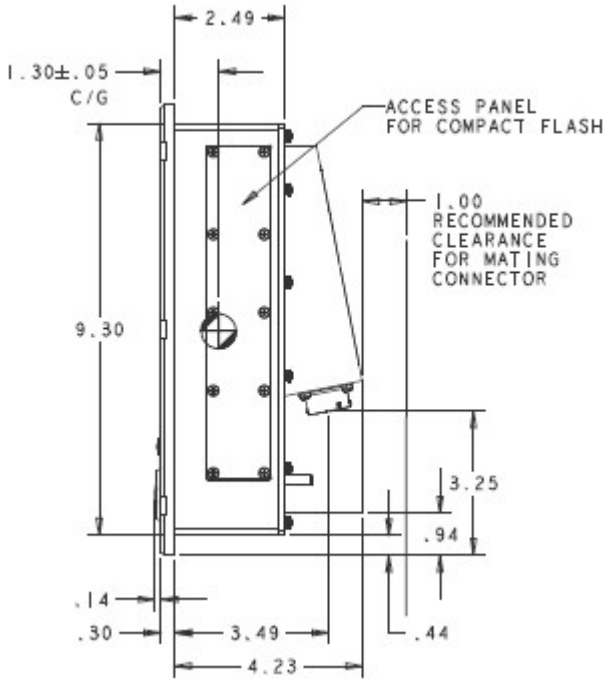

Figure A-11: CDU Bottom View

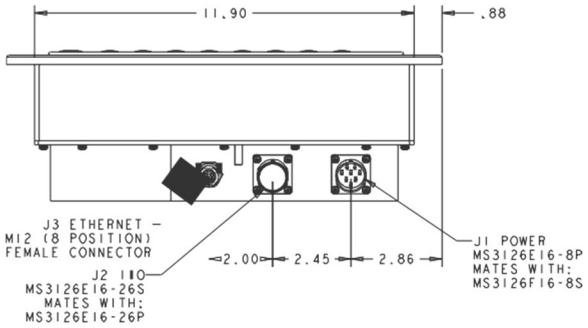

A.4. Power Converter Outline Drawing

Figure A-12: Power Converter Top View

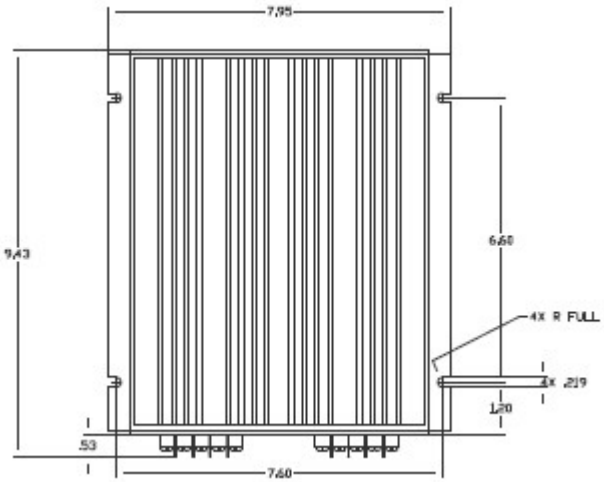

Figure A-13: Power Converter End View

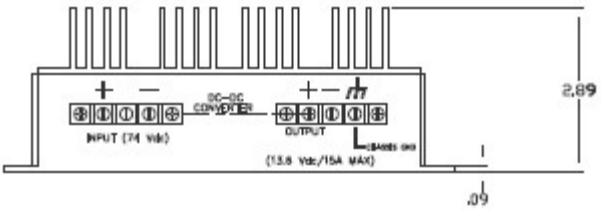

A.5. Alerter Cable Outline Drawing

Figure A-14: Alerter Cable Outline Drawing

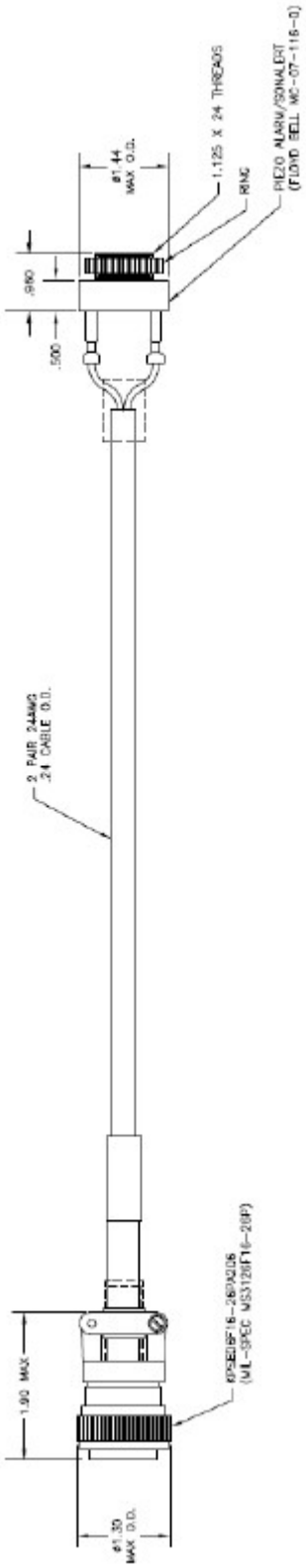

A.6. Current Monitor CM-09 Outline Drawing

Figure A-15: CM-09 Front View

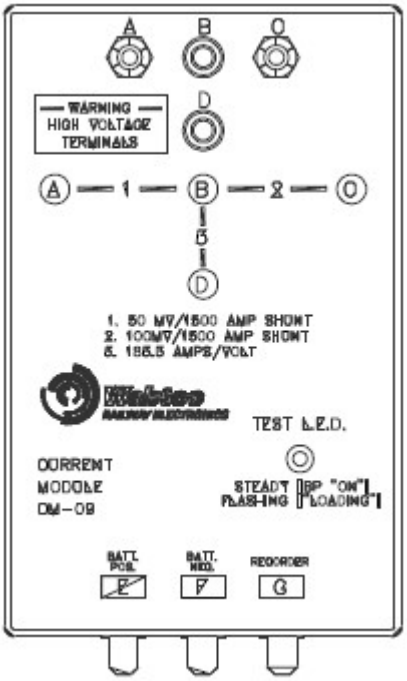

Figure A-16: CM-09 Side View

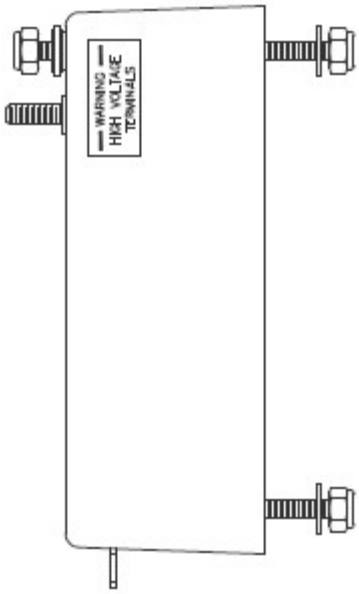

A.7. VM-03 Voltage Monitor Outline Drawing

Figure A-17: VM-03 Front View

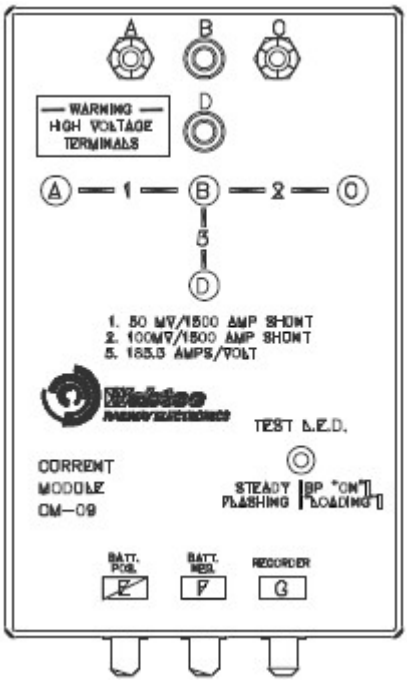

Figure A-18: VM-03 Side View

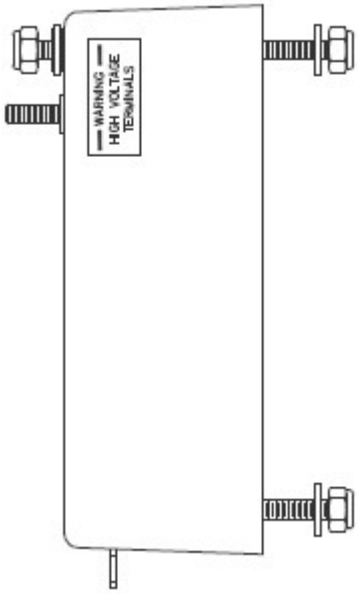

A.8. Iso Amp (Axle Generator Power Supply) Outline Drawing

Figure A-19: Iso Amp Front View

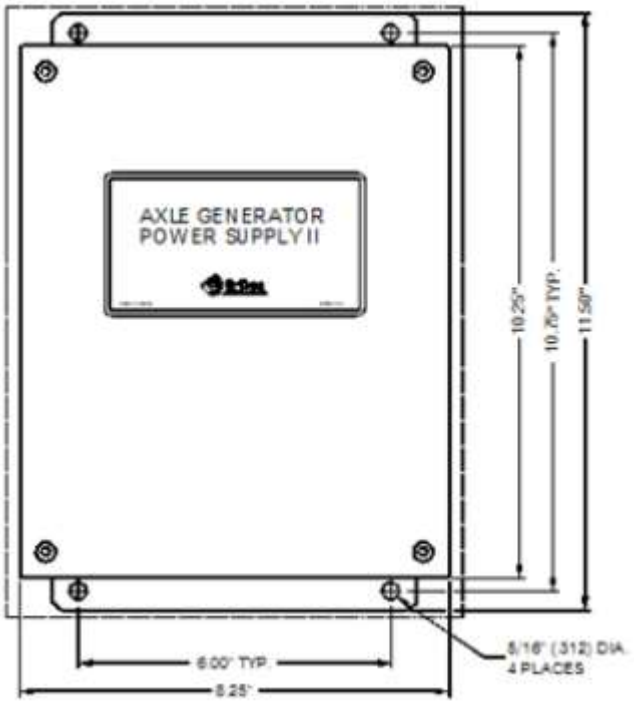

Figure A-20: Iso Amp End View

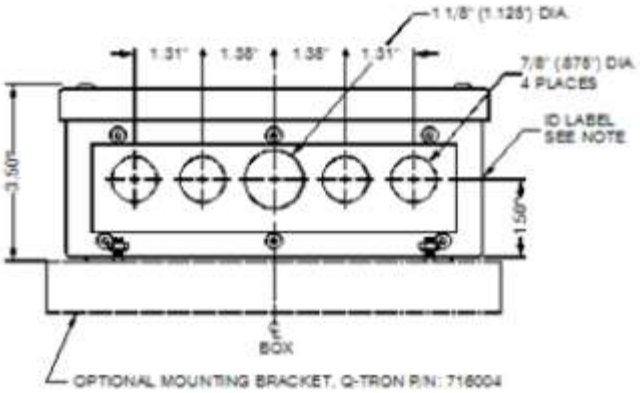

A.9. Single Axle Generator Outline Drawing

Figure A-21: Single Axle Generator Top View

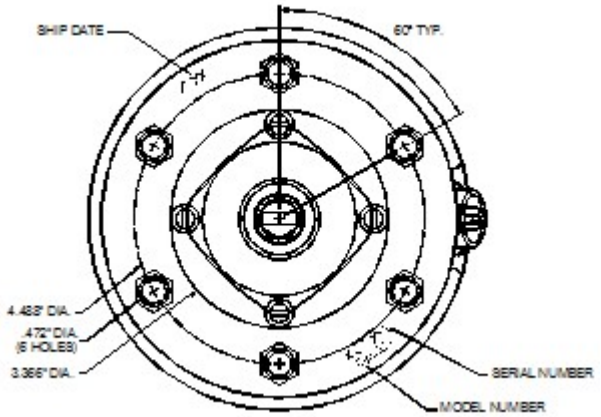

Figure A-22: Single Axle Generator Side View

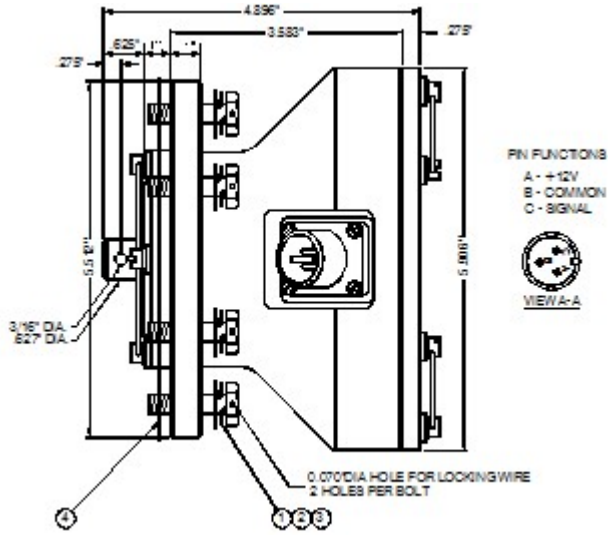

A.10. Dual Axle Generator Outline Drawing

Figure A-23: Dual Axle Generator Top View

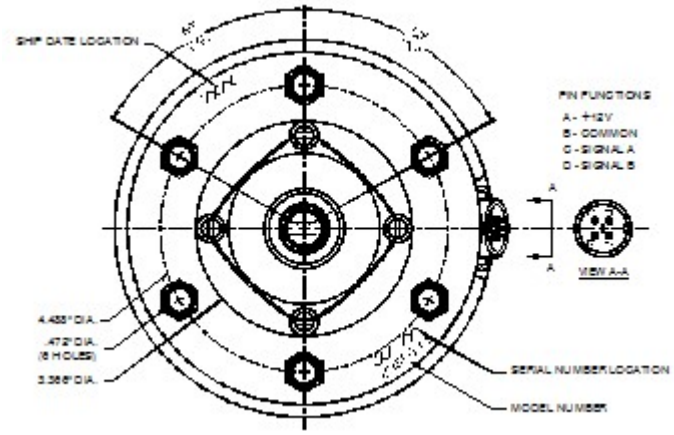

Figure A-24: Dual Axle Generator Side View

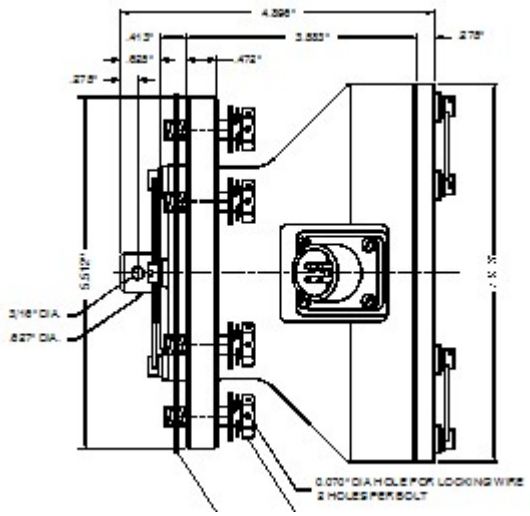

A.11. Quadrature Wheel Tach (Axle Alternator) Outline Drawing

Figure A-25: Quadrature Wheel Tach

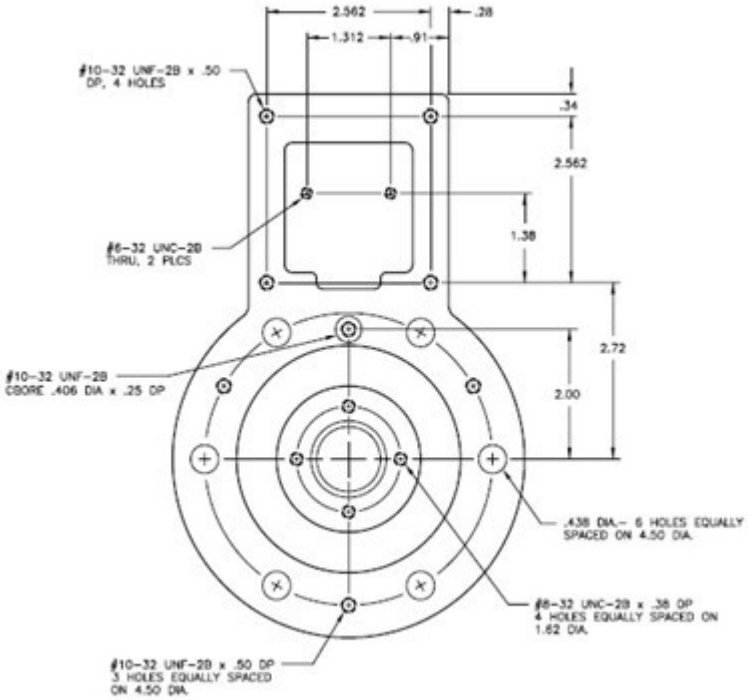

A.12. PTC Recorder Outline Drawing

Figure A-26: PTC Recorder Front View

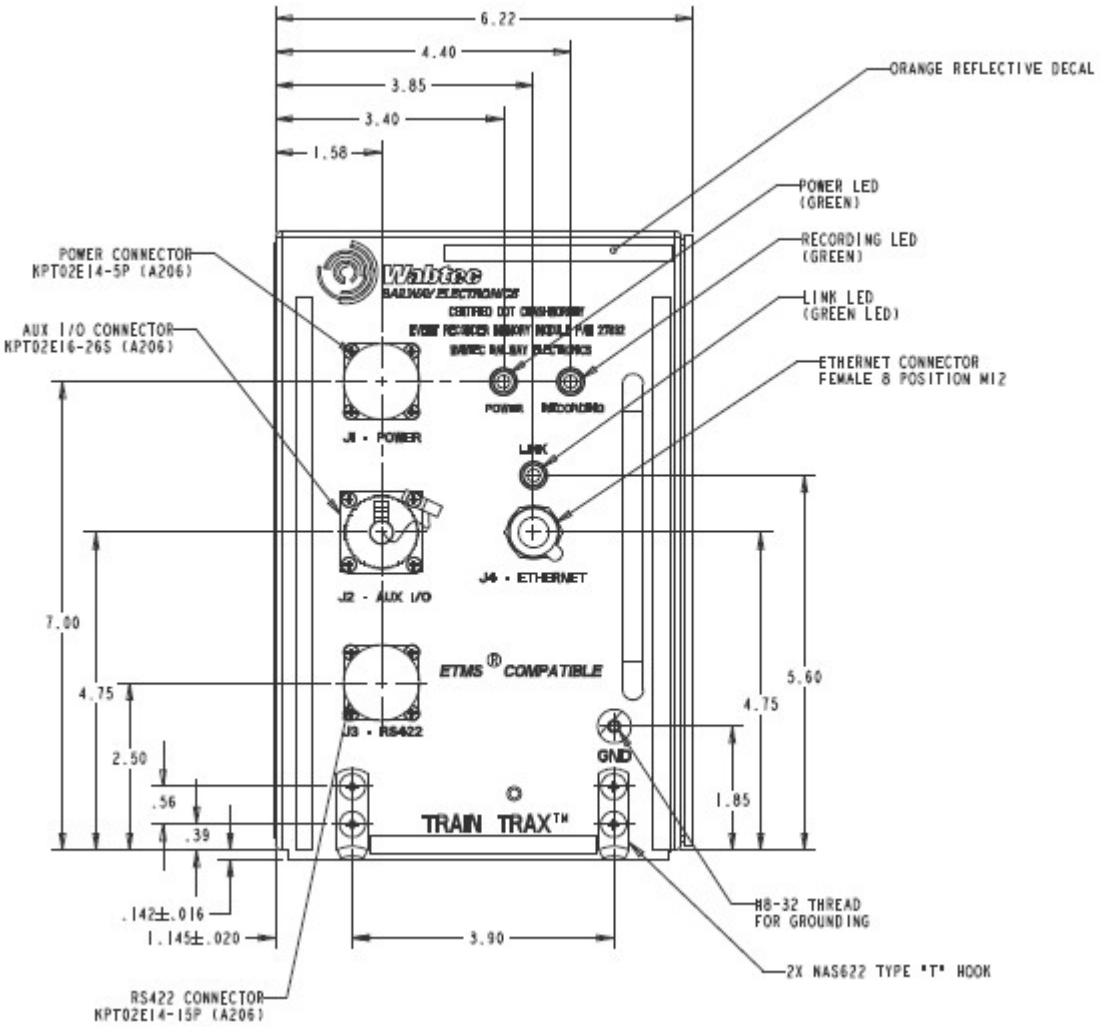

Figure A-27: PTC Recorder Side View

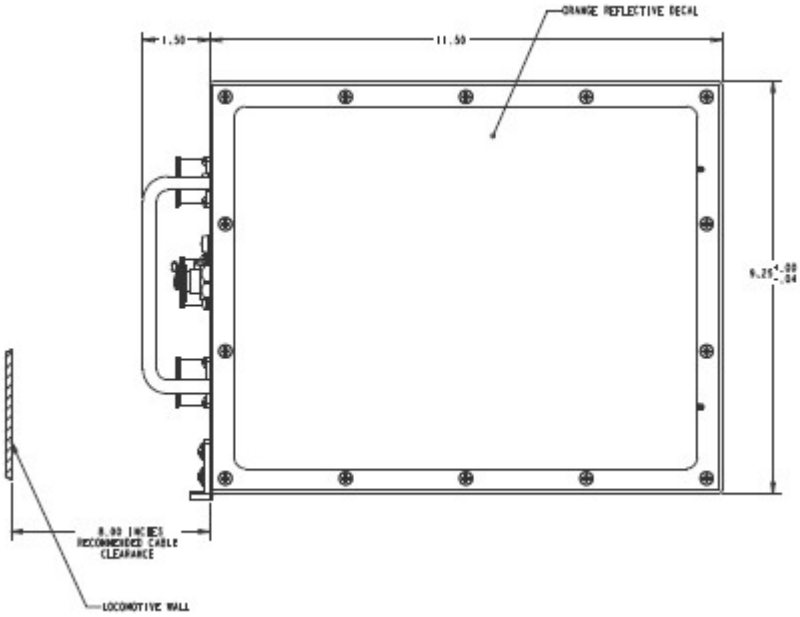

A.13. Cell Modem Outline Drawing

Figure A-28: Cell Modem Views

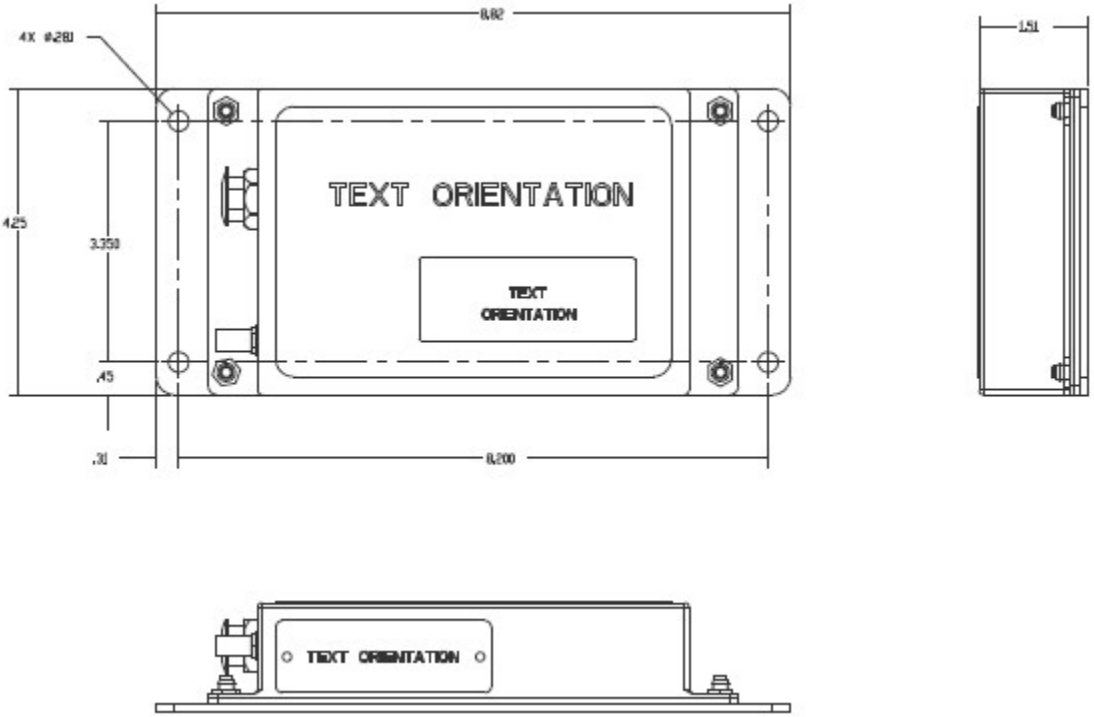

A.14. Cell Modem Junction Box Outline Drawing

Figure A-29: Cell Modem Junction Box Top View

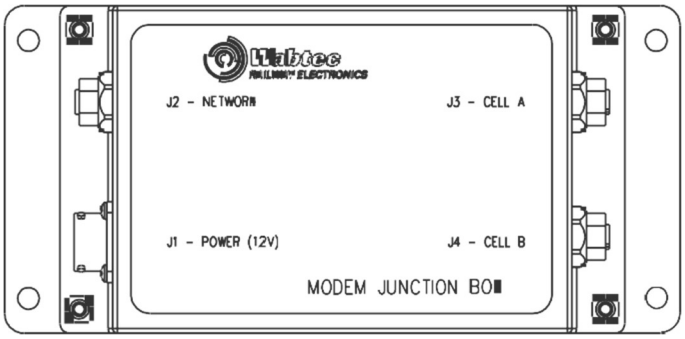

Figure A-30: Cell Modem Junction Box Side View

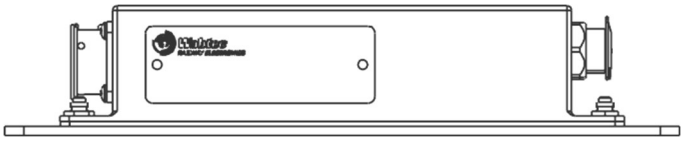

A.15. Pressure Transducer Outline Drawing

Figure A-31: Pressure Transducer

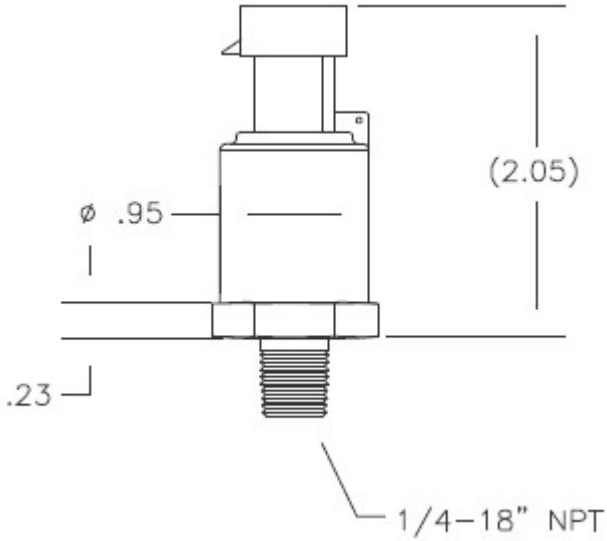

A.16. Pressure Switch Outline Drawing

Figure A-32: Pressure Switch

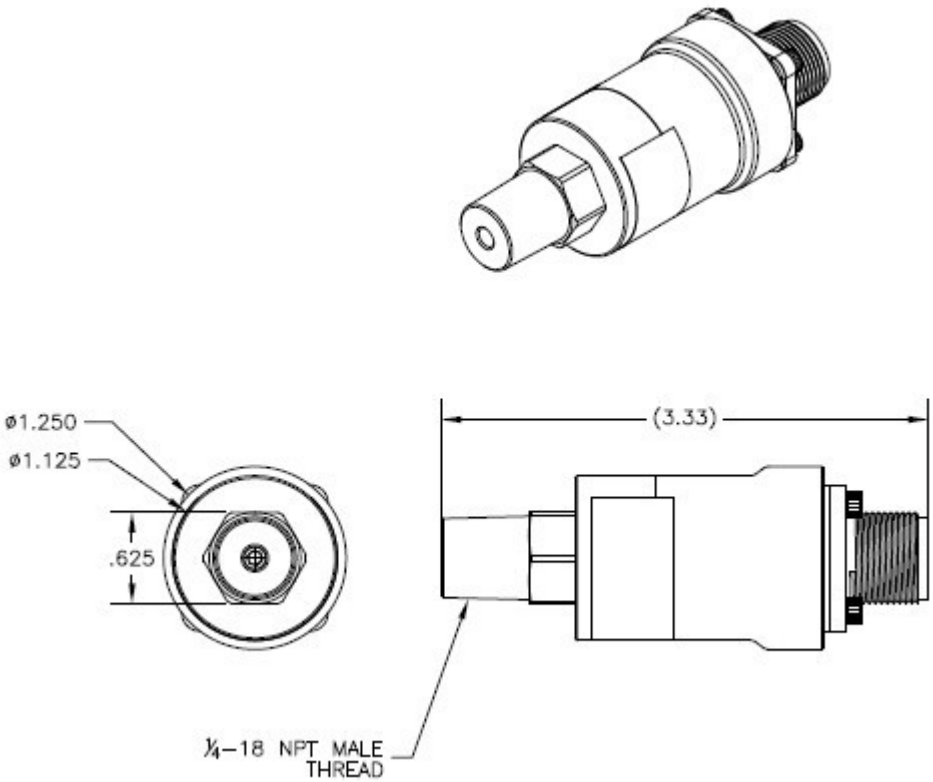

A.17. NSM-04 Outline Drawing

Figure A-33: NSM-04

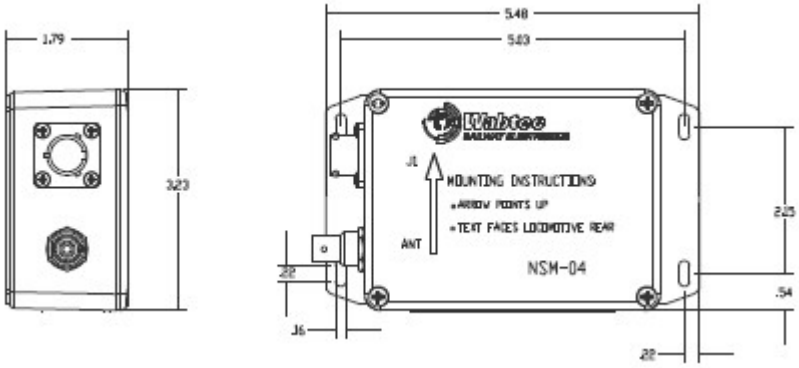

A.18. Train Management Computer Outline Drawing

Figure A-34: TMC Front View

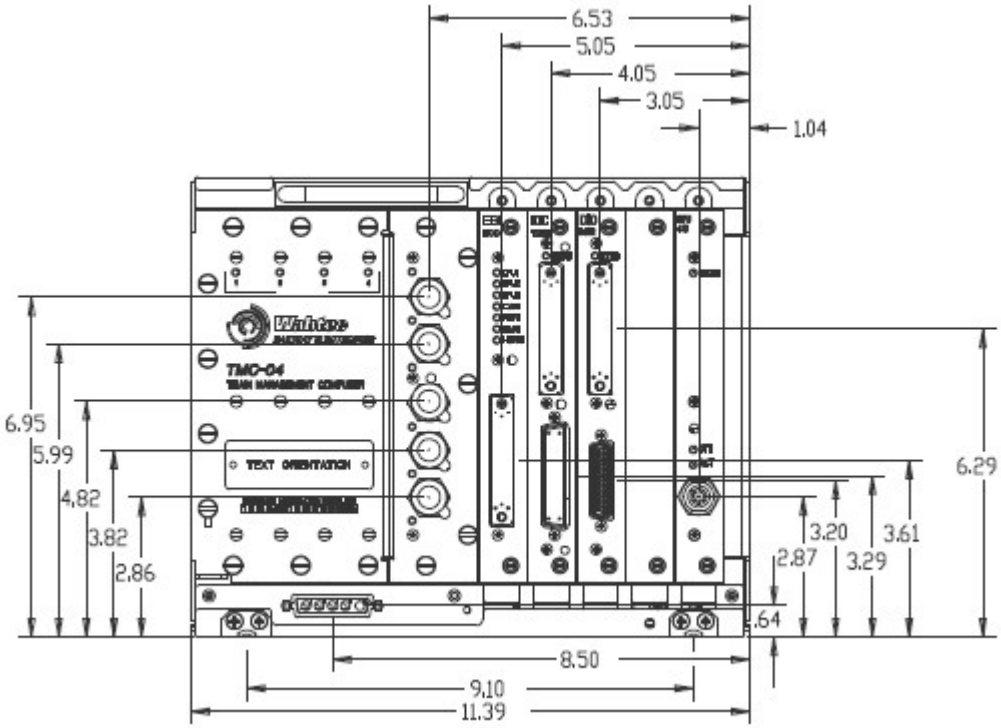

Figure A-35: TMC Side View

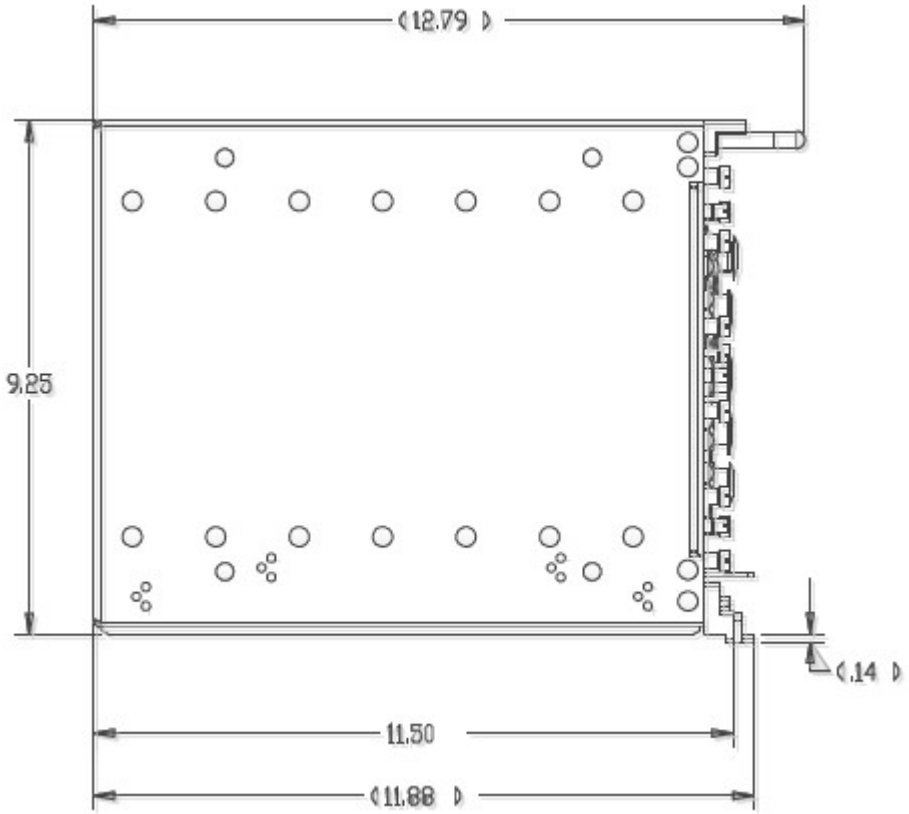

Figure A-36: TMC

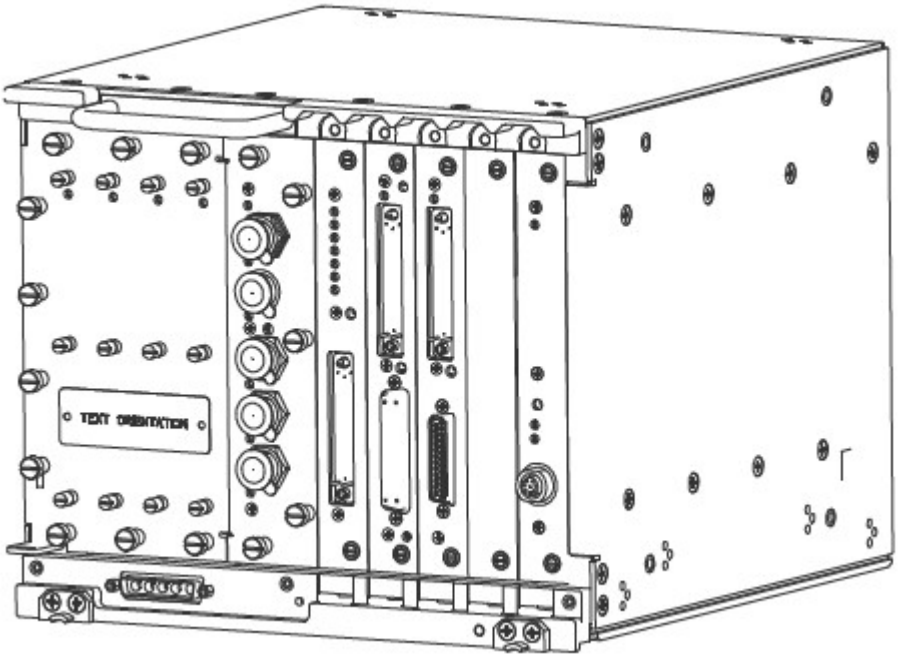

A.19. Tri-Mode Antenna Outline Drawing

Figure A-37: Tri-Mode Antenna

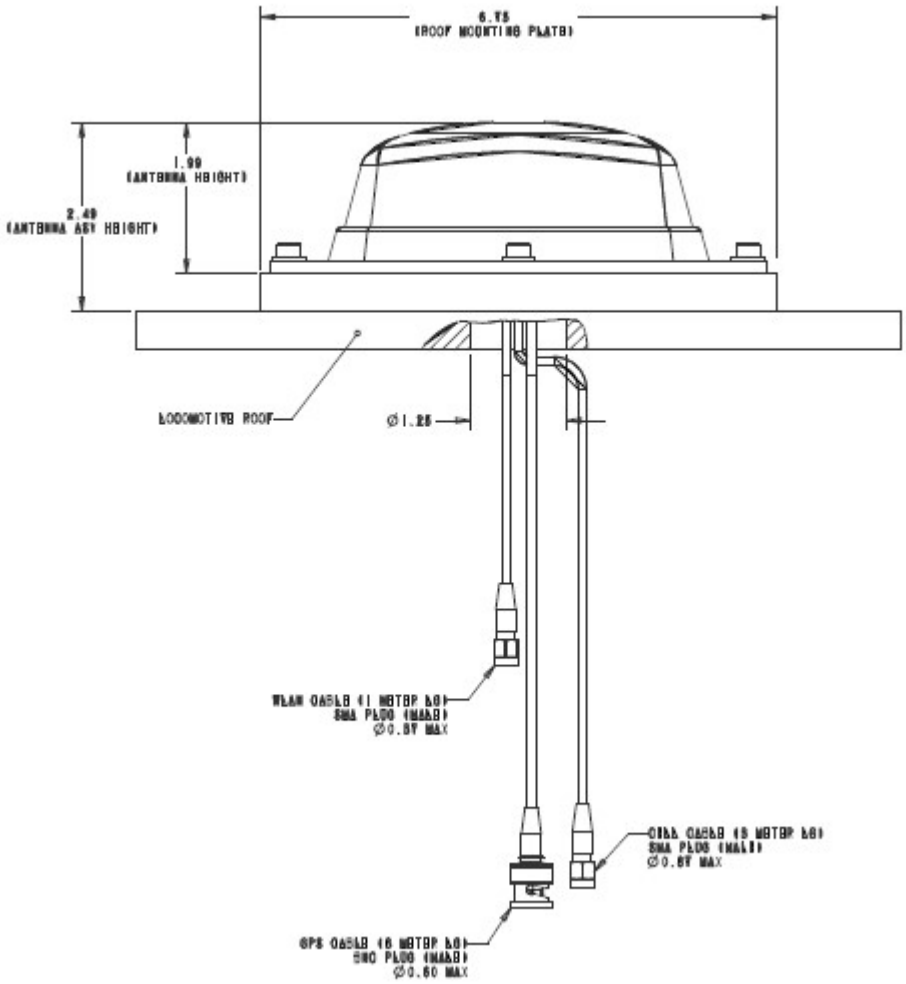

/// Appendix B Interconnect Drawings

B.1. DIO 2400 Connectors

Figure B-1: DIO 2400 Connectors

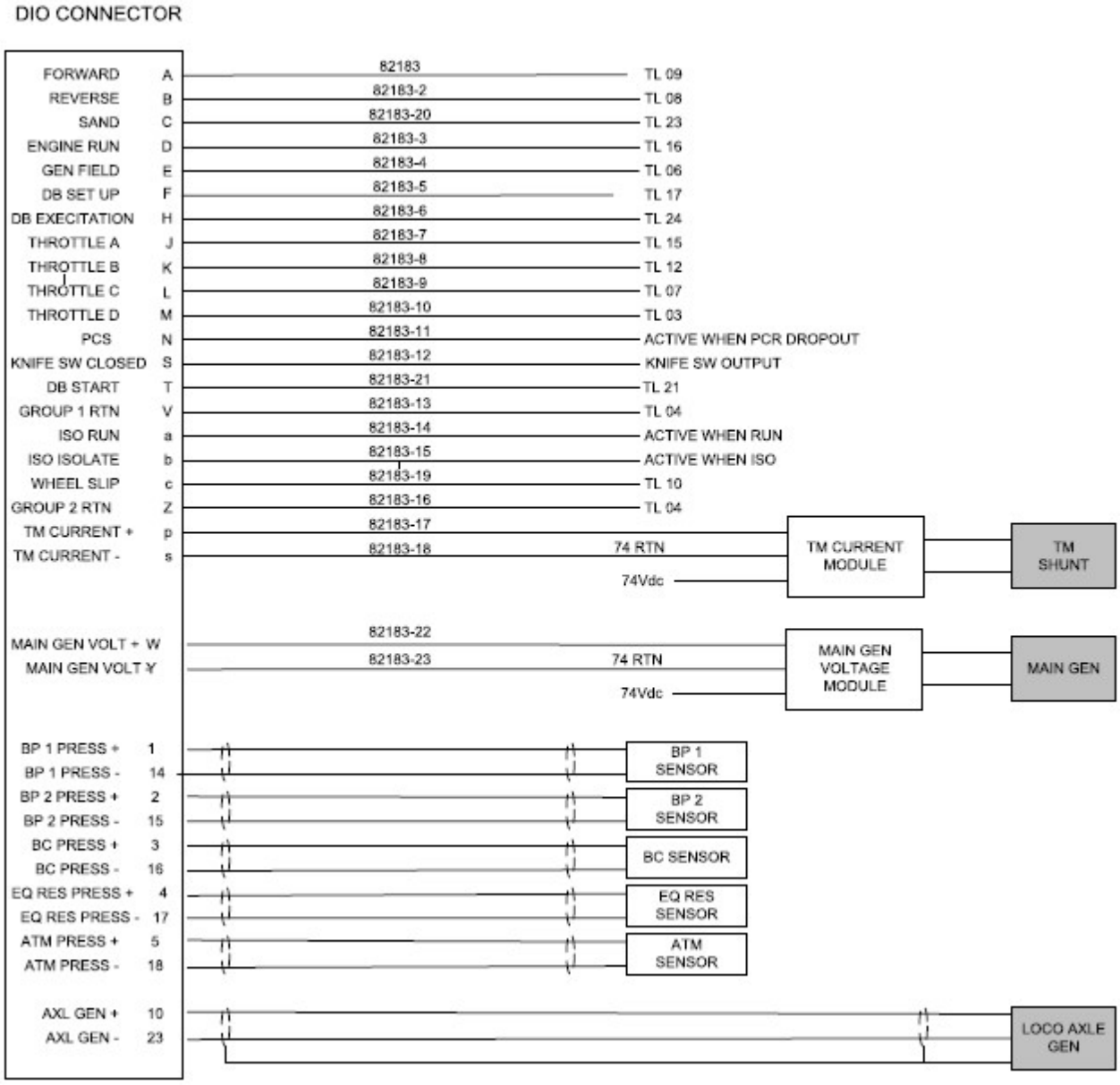

B.2. IOC 1206 Connections

Figure B-2: IOC 1206 Connections

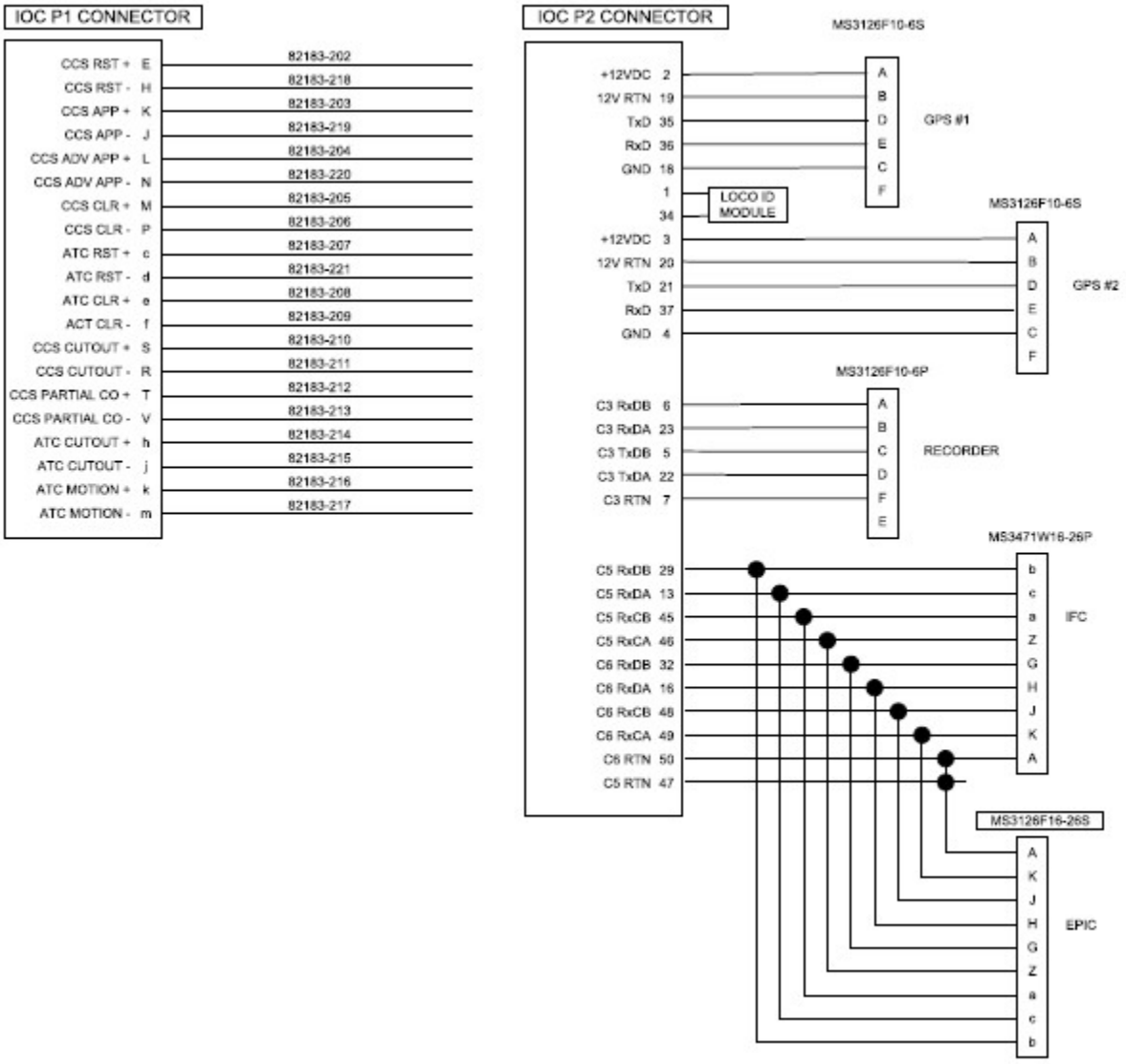

B.3. EBI Connections, 26L, No Cab Signal

Figure B-3: EBI Connections, 26L, No Cab Signal

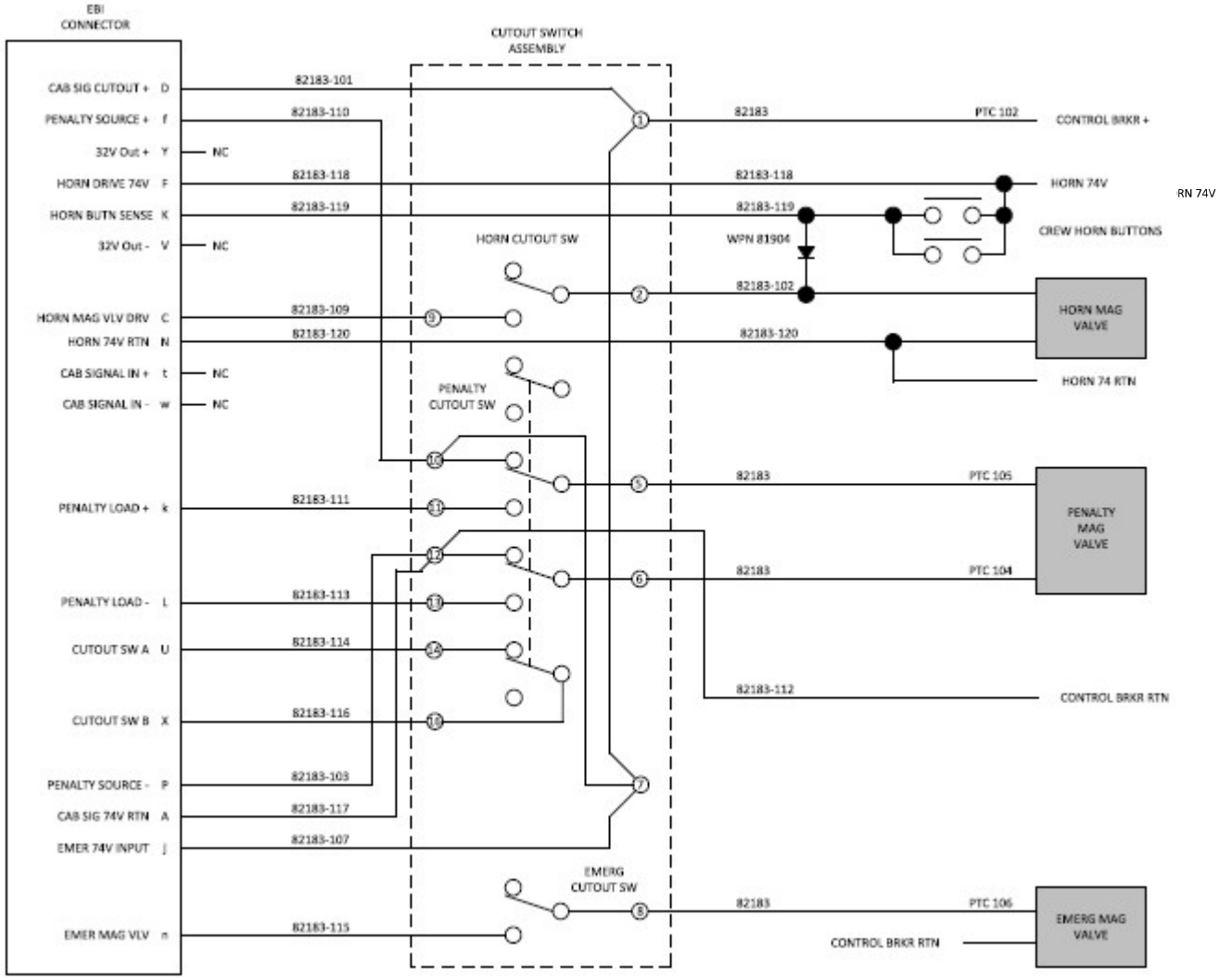

B.4. EBI Connections, 26L with Air Actuated Horn, No Cab Signal, Pneumatic Horn Valve

Figure B-4: EBI Connections, 26L with Air Actuated Horn, No Cab Signal, Pneumatic Horn Valve

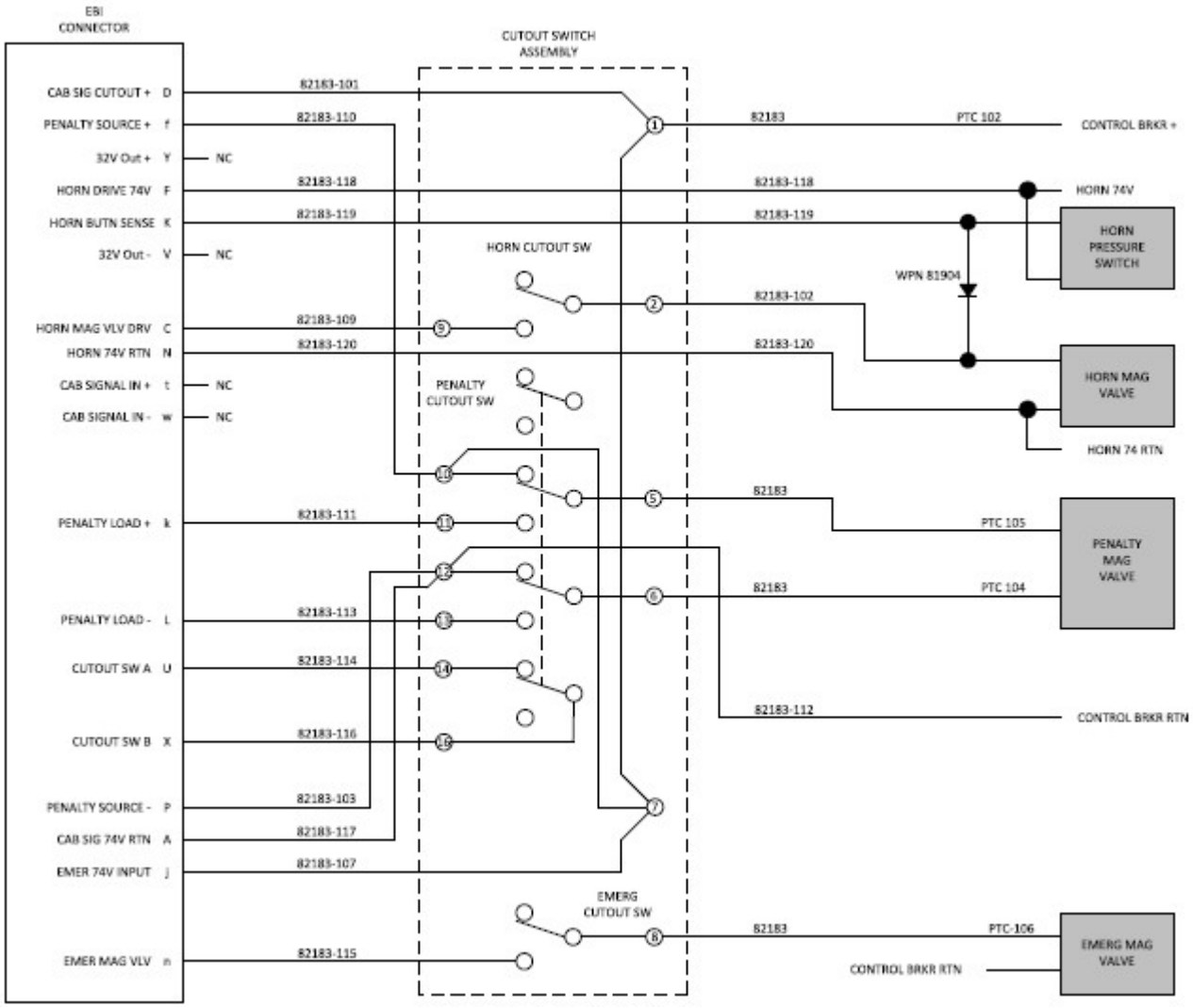

B.5. EBI Connections, Wabtec Electronic Air Brake with Cab Signal

Figure B-5: EBI Connections, Wabtec Electronic Air Brake with Cab Signal

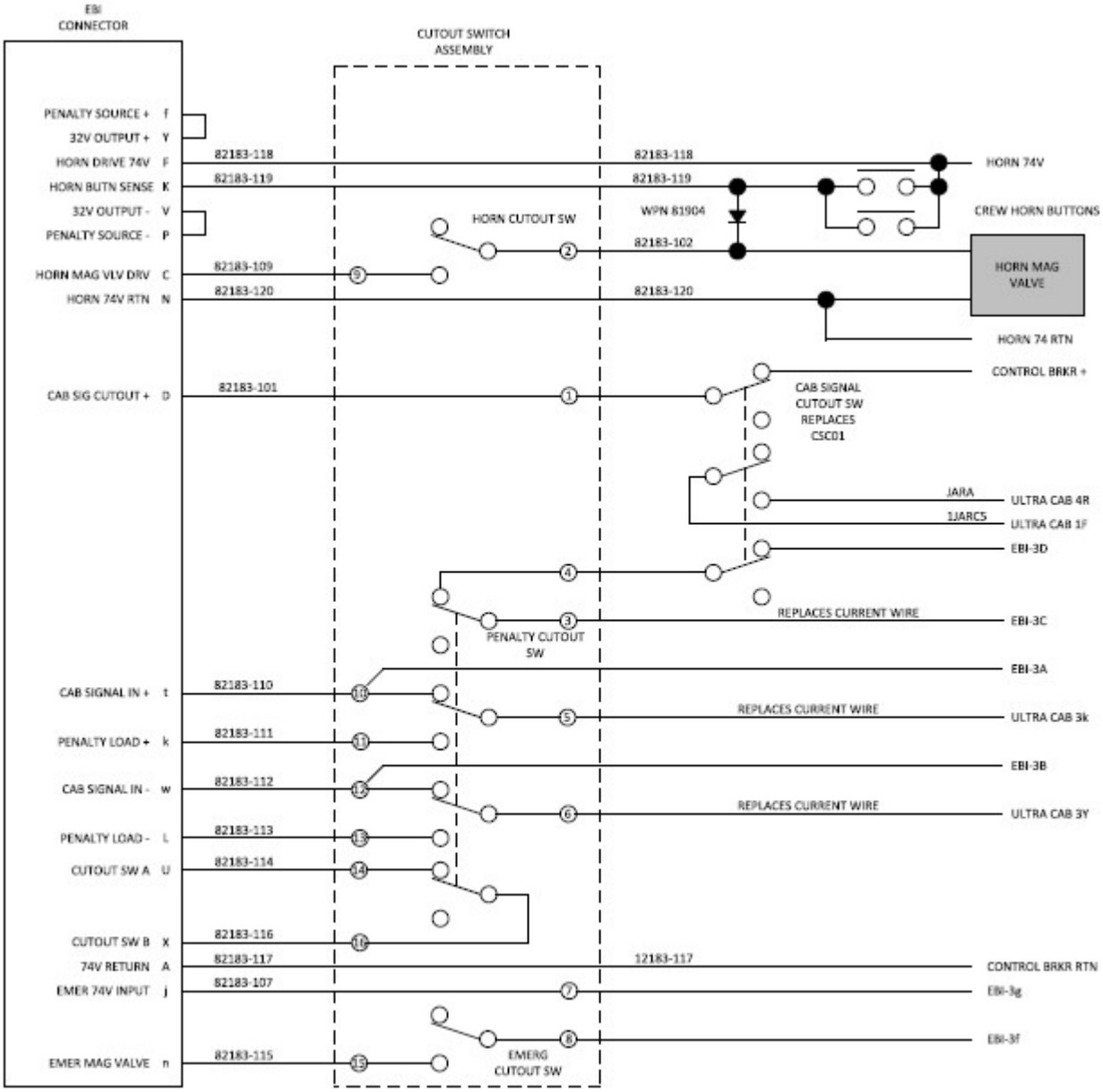

B.6. EBI Connections, Knorr Electronic Air Brake with Cab Signal
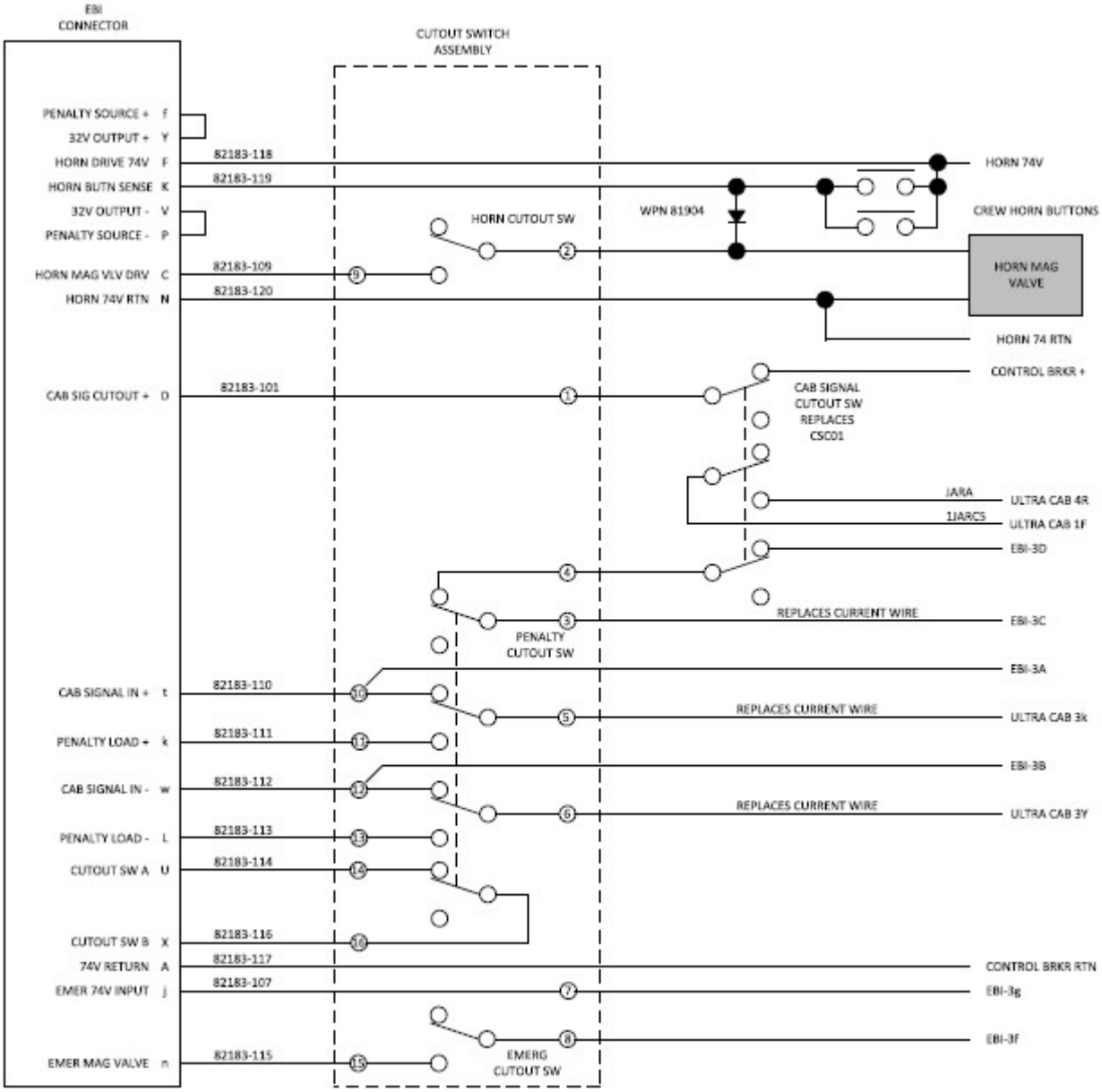
Figure B-6: EBI Connections, Knorr Electronic Air Brake with Cab Signal